arXiv:quant-ph/0005024v3 25 May 2000

Regaining time symmetry in the generalized quantum mechanics of the Brussels School

Kim J. Boström

(October 11, 2019)

Despite the fact that the fundamental physical laws are symmetric in time, most observed processes do not show this symmetry. The phenomenon of decay, however, seems to involve some kind of irreversibility, making the definition of a microscopic arrow of time imaginable. Such an intrinsic irreversibility of decaying systems is incorporated within the generalized quantum mechanics of the Brussels School, contrasting to the statements of standard quantum mechanics. As shown in this paper, the formlism bears significant advantages describing systems involving decay, however the breaking of time symmetry can be avoided using a different mathematical framework.

I. INTRODUCTION

Asking for the time evolution of a system means solving the Schrödinger equation $i\hbar\frac{\partial}{\partial t}\psi = H\psi$. Restricted to the case of closed systems - which is done from now on - this equation can formally be solved by

$$\psi(t) = e^{-iHt}\psi \quad , \tag{1}$$

with $\hbar = 1$ for the sake of simplicity and $\psi = \psi(0)$. The whole dynamics is thus governed by the unitary propagator $U(t) = e^{-iHt}$ which maps any given "initial state" ψ at time $t = 0$ to its propagated counterpart $\psi(t)$ at time t. Quantum mechanical determinism is expressed by the fact that ψ can also be regarded as a "final state" into which a state $\psi(-t)$ evolves by satisfying $U(t)\psi(-t) = \psi$ (see fig. 1).

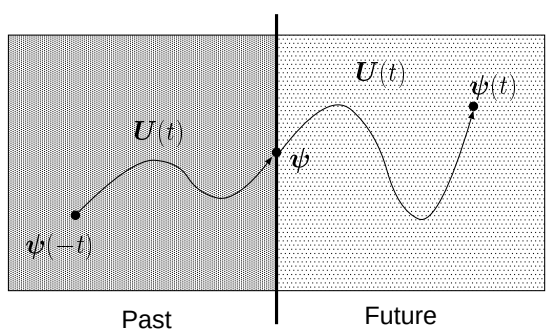

FIG. 1. In standard quantum mechanics every state of a closed system can at the same time be regarded as an initial state and a final state.

Since equation (1) is valid for all times $t \in \mathbb{R}$, giving $\psi(-t) = U(-t)\psi$, one is led to the operator identity

$$U(-t)U(t) = \mathbb{1} \quad . \tag{2}$$

In other words: The set of evolution operators $\{U(t)\}$ forms a unitary group $\mathcal{U}$ with the group property (2), giving any propagator $U(t)$ its inverse element $U(-t) = U^\dagger(t)$. The physical meaning of this mathematical statement is profound: in quantum mechanics there is no microscopic arrow of time. Any state $\psi \in \mathcal{H}$ can be propagated to the future as well as to the past, so that there is a complete time symmetry.

In order to explain an arrow of time despite these facts, there are several ideas. A few of them are:

- Any measurement on the system interrupts the deterministic evolution of the state by applying random projections (plus normalization) instead of unitary operations (the "collapse of the wave function"). This process cannot be reversed.

- Real physical systems can never be regarded as closed. There is always an interacting environment with many unobservable degrees of freedom, inducing non-unitary time evolution of the observed system.

- Even if there is no *microscopic* arrow of time, one can, in anology to classical mechanics, define reasonable *macroscopic* observables that do not behave symmetrically in time.

All these ideas have been worked out to elaborate physical models with strong experimental support and all of them break time symmetry (see e.g. [15,9]). So one could be content with the situation and regard those models as fairly good explanations of an arrow of time, which is indeed an undeniable part of human experience.

A group of scientists around *Ilja Prigogine* (nobel prize in chemistry 1977), referred to as the "Brussels School", is not satisfied with the situation and has worked out a quantum mechanical formalism especially applying to unstable systems (i.e. systems involving decay), where time symmetry is broken at the microscopic level (see e.g. [12,2,1,4,6,5,10]).

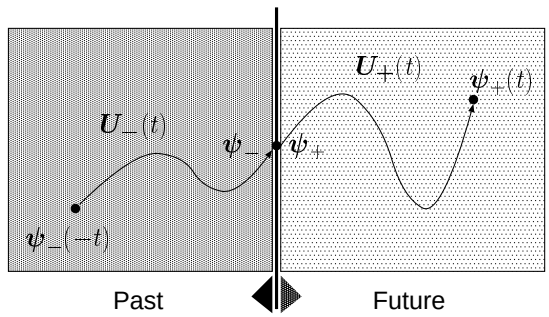

FIG. 2. In Brussels School's quantum mechanics every state is whether an initial or a final state. Time evolution falls apart into two different directions.

This fact is expressed by the splitting of the unitary group $\mathcal{U}$ into two semigroups $\mathcal{U}_-$ and $\mathcal{U}_+$ of propagators for negative and positive times, such that past and future states can no longer be regarded as equivalent counterparts. This leads to a so-called "intrinsic irreversibility", implying a microscopic arrow of time (see fig. 2).

The aim of this paper is to shortly present the basic concepts of the Brussels School's formalism, to show how it can be applied, to point out its advantages, to redraw the argumentation in favour of a microscopic arrow of time and to finally reject this argumentation by revealing a circular argument within the physical and a false conclusion within the mathematical reasoning. A framework is presented, wherein the formalism is fully applicable and where time symmetry is preserved.

II. THE BASIC CONCEPTS

A. Spectral decompositions

Writing down the formal solution (1) of a closed system's Schrödinger equation is not yet really satisfying. How can expectation values of observables be numerically calculated? To this aim one has to find a spectral decomposition of the system's Hamiltonian H, thus one has to solve the time-independent Schrödinger equation $H\psi = E\psi$. Since H is a self-adjoint operator, its spectral decomposition is complete and orthogonal and may therefore be used as a spectral decomposition of the unity operator $\mathbb{1}$. Furthermore the spectrum of H is real and consits in general of a discrete part σ_d and a continuous part σ_c. In special cases there are other parts, e.g. singular continuous and dense spectra, but these cases are excluded here. With this restriction, using the Dirac bra-ket notation, the spectral decomposition of the unity operator reads in general

$$\mathbb{1} = \sum_n |E_n\rangle\langle E_n| + \int_{\sigma_c} dE\, \rho(E)\, |E\rangle\langle E| \quad , \tag{3}$$

where $H|E_n\rangle = E_n|E_n\rangle$, $H|E\rangle = E|E\rangle$ and $\rho(E)$ is the state density function. As soon as the energy decomposition of the initial state $|\psi\rangle$, generally given by

$$|\psi\rangle = \sum_n \psi_n|E_n\rangle + \int_{\sigma_c} dE\, \rho(E)\, \psi(E)|E\rangle \quad , \tag{4}$$

is known, the propagated state is also known and reads

$$|\psi(t)\rangle = \sum_n \psi_n e^{-iE_n t}|E_n\rangle + \int_{\sigma_c} dE\, \rho(E)\, \psi(E) e^{-iEt}|E\rangle \quad . \tag{5}$$

The expectation value of an observable A can be calculated for any time t using

$$< A > (t) = \langle\psi(t)|A|\psi(t)\rangle \quad . \tag{6}$$

So the fundamental key to the dynamics of a system is the spectral decomposition of its Hamiltonian. All dynamical properties are monitored by this decomposition and here is where the new formalism enters. There is a class of systems where the Brussels Schools's spectral decomposition of the Hamiltonian differs from the usual decomposition: systems envolving decay, called *unstable systems*.

B. Resolvent techniques

The basic concept of the Brussels School's formalism is to find a different spectral decomposition of the Hamiltonian. In contrast to the method of *complex scaling* (see [3]), the Hamiltonian is not modified and remains self-adjoint; it only acquires a different representation involving generalized eigenvectors contained in an extended distribution space. The modified decomposition can most easily be achieved by using the Hamiltonian's *resolvent*

$$R(z) := \frac{1}{z - H} \quad . \tag{7}$$

The spectrum of H is defined by the irregularities of its resolvent. The discrete eigenvalues are the singularities of $R(z)$, i.e. those points in the complex plane where the operator R is not everywhere defined on the Hilbert space $\mathcal{H}$. The continuous eigenvalues are those points where R is an unbound (and thus non-continuous) operator on $\mathcal{H}$. Anywhere else on the complex plane the resolvent is an analytic function mapping complex numbers onto the set of linear bounded operators. As H is self-adjoint, any irregularities of R take place on the real axis, where the discrete eigenvalues form the point spectrum and the continuous eigenvalues define a cut in the complex plane (see fig. 3).

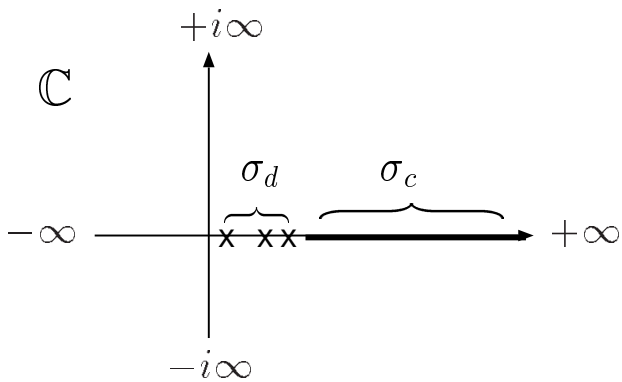

FIG. 3. The eigenvalues of the Hamiltonian H are the irregularities of its resolvent $R(z) = \frac{1}{z-H}$. Since H is self-adjoint, they all take place on the real axis, where the discrete eigenvalues $E_n \in \sigma_d$ are singularities and the continuous eigenvalues $E \in \sigma_c$ form a cut in the complex plane.

It is possible to find an analytic continuation of R from both sides of the cut, each leading to a different operator

$$R_\pm(E) := \frac{1}{E - H \pm i\epsilon} = R_\mp^\dagger(E), \tag{8}$$

with $\epsilon \to +0$ understood here and in the following. Note that this continuation is not possible at singularities embedded in the continuous spectrum. Note further that on the real axis outside the continuous spectrum both operators R_+ and R_- coincide with R. The two continued resolvents are known as the *retarded* and the *advanced Green operator*, respectively.

The resolvent can be used to construct eigenvectors. The residuum of the resolvent at a discrete eigenvalue yields the dyadic product of the corresponding eigenvector:

$$\lim_{z \to E_n \pm i\epsilon} (z - E_n) R(z) = |E_n^\pm\rangle\langle E_n^\pm| \quad . \tag{9}$$

Note that both dyadic products project onto the same subspace corresponding to E_n. If the discrete eigenvalue is isolated, i.e. not embedded in the continuous spectrum, both limits from above and below the real axis coincide. In the following we will assume that all discrete eigenvalues are isolated and we therefore have

$$\lim_{z \to E_n} (z - E_n) R(z) = |E_n\rangle\langle E_n| \quad . \tag{10}$$

A discrete eigenvector $|E_n\rangle$ of H can be obtained by applying the residual resolvent to any Hilbert vector $|\psi\rangle$ being not orthogonal to the eigenspace of E_n. :

$$|E_n\rangle = \frac{1}{\psi_n} \lim_{z \to E_n} (z - E_n) R(z) |\psi\rangle \quad , \tag{11}$$

where $\psi_n = \langle E_n|\psi\rangle \neq 0$ is an adequate normalization constant, such that $\langle E_n|E_m\rangle = \delta_{nm}$.

In analogy to the discrete case the residuum of the resolvent at one of the continuous eigenvalues yields the dyadic product of the corresponding continuous eigenvector:

$$\lim_{z \to E \pm i\epsilon} (z - E) R(z) = |E^\pm\rangle\langle E^\pm| \quad . \tag{12}$$

Note that both dyadic products are equivalent representations of the δ-Operator $\delta(E - H_c)$, defined by

$$\int_{\sigma_c} dE\, \rho(E)\, \delta(E - H_c) f(E) := f(H_c) \quad , \tag{13}$$

where H_c is the continuous part of the total Hamiltonian H. Since the continuous eigenvalues are not isolated, there are always pairs of eigenvectors. They correspond to retarded and advanced solutions of the continuous eigenvalue equation and are known as *incoming* and *outgoing waves*. Both solutions can equivalently be used in the spectral decomposition and they can be constructed by

$$|E^\pm\rangle = \frac{1}{\psi_\pm(E)} \frac{\pm i\epsilon}{E - H \pm i\epsilon} |\psi\rangle \quad , \tag{14}$$

where $\psi_\pm(E) = \langle E^\pm|\psi\rangle \neq 0$ is a suitable normalization constant, such that $\langle E^\pm|E'^\pm\rangle = \delta(E - E')$.

Using dyadic products, the retarded and advanced Green operators can be written as

$$E \in \sigma_c : \quad R_\pm(E) = \frac{\mathcal{P}_E}{E - H} \mp i\pi |E\rangle\langle E| \quad , \tag{15}$$

where $|E\rangle\langle E|$ is any of the two dyadic products $|E^\pm\rangle\langle E^\pm|$ and the principal value distribution $\mathcal{P}_E$ is defined by

$$\int dE'\, \mathcal{P}_E\, f(E') := \int_{E-\epsilon}^{E+\epsilon} dE'\, f(E') \quad . \tag{16}$$

The difference of the two Green operators gives the dyadic product of the continuous eigenvector:

$$\frac{i}{2\pi} \big\{ R_+(E) - R_-(E) \big\} = |E^\pm\rangle\langle E^\pm| \quad . \tag{17}$$

Altogether, the spectral decomposition of the unity operator may be expressed by the exclusive use of the resolvent:

$$\mathbb{1} = \sum_n \lim_{z \to E_n} (z - E_n) R(z) + \frac{i}{2\pi} \int_{\sigma_c} dE\, \rho(E) \big\{ R_+(E) - R_-(E) \big\} \quad . \tag{18}$$

This unity decomposition will be used as the starting point of the Brussels Schools's unity spectral decomposition.

C. The second Riemann sheet

The resolvent can be analytically continued to the complex plane beyond the real axis entering the *second Riemann sheet*:

$$R_{\pm}(z) := \lim_{E\to z} R_{\pm}(E), \quad E \in \sigma_c \quad . \tag{19}$$

On the one half of the complex plane where the continuation started (the first Riemann sheet), both operators coincide with the original resolvent. On the other half (the second Riemann sheet) it might happen that new singularities appear, and that in a pairwise manner: If z_k is a singularity of $R_+(z)$ in the lower half of the complex plane, then z_k^* is a singularity of $R_-(z)$ in the upper half (see fig. 4). Unstable systems are exactly those with a resolvent having complex poles on the second Riemann sheet.

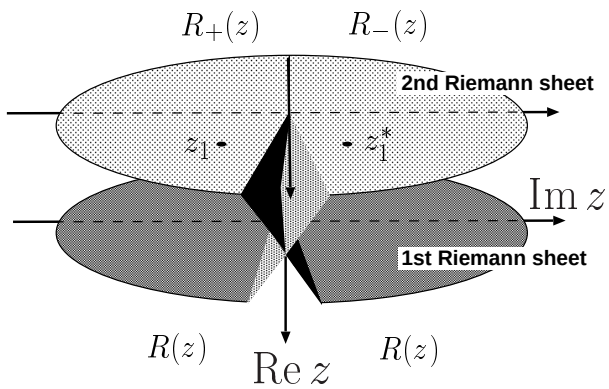

FIG. 4. The second Riemann sheet. New singularities of the analytically continued resolvent may appear, both complex conjugated to another.

The second Riemann sheet poles act as complex resonances and cause the decay of certain states.

D. An extended spectral decomposition

Consider the continuous part of the unitary decomposition (18):

$$\mathbb{1}_c := \frac{i}{2\pi}\int_{\sigma_c} dE\,\rho(E)\left\{R_+(E) - R_-(E)\right\} \quad . \tag{20}$$

The following manipulations of $\mathbb{1}_c$ are reducing its domain. As a consequence one is forced to use a smaller *test space*, enlarging at the same time the distribution space and inducing this way a certain *Gelfand tripel* or *rigged Hilbert space* where the modified completeness relation remains valid. We delay this discussion to section IV.

If one analytically deforms the integration path along the continuous spectrum σ_c to a path Γ_+ leading through the lower half of the complex plane, one enters the second Riemann sheet and crosses the singularities of $R_+(z)$. Let the set of these singularities be defined by $\sigma_+ = \{z_k\}$ and be enclosed by $\sigma_c \cup \Gamma_+$. In the course of the deformation circular integrations around the singularities are split off, each leading to a residuum of $R_+(z)$ at these points (see fig. 5).

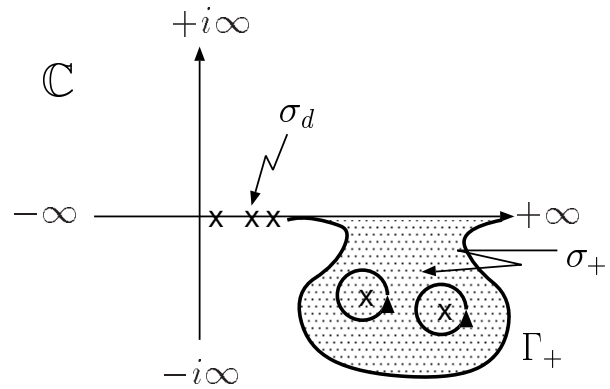

FIG. 5. Analytically deforming the integration path along σ_c to a path Γ_+ one crosses the singularities of $R_+(z)$, which have to be split off from the integration.

The modified operator now reads

$$\mathbb{1}_c^+ = \sum_k \lim_{E\to z_k}(E - z_k)R_+(E) + \frac{i}{2\pi}\int_{\Gamma_+} dz\,\rho(z)\left\{R_+(z) - R_-(z)\right\} \quad . \tag{21}$$

Introducing a *complex distribution* $D_{\pm}(E)$, defined by

$$\int_{\sigma_c} dE\,D_{\pm}(E)\,f(E) := \int_{\Gamma_{\pm}} dz\,f(z) \quad , \tag{22}$$

where $\Gamma_- = \Gamma_+^*$ and $f(z)$ being the analytic continuation of f to respectively the upper and lower half of the complex plane, one can rewrite $\mathbb{1}_c^+$ as

$$\mathbb{1}_c^+ = \sum_k \lim_{E\to z_k}(E - z_k)R_+(E) + \frac{i}{2\pi}\int_{\sigma_c} dE\,\rho(E)\,D_+(E)\left\{R_+(E) - R_-(E)\right\} \quad . \tag{23}$$

In analogy to the standard case one defines dyadic products of *generalized eigenvectors* of H by

$$|f_k^+\rangle\langle f_k^-| := \lim_{E\to z_k}(E - z_k)R_+(E) \tag{24}$$

for the discrete case and, using (17),

$$|f^+(E)\rangle\langle f^-(E)| = D_+(E)|E\rangle\langle E| \tag{25}$$

for the continuous case, where $|E\rangle\langle E|$ is any of the two dyadic products $|E^{\pm}\rangle\langle E^{\pm}|$. Hence we have

$$\int_{\sigma_c} dE\,\rho(E)\,|E\rangle\langle E| = \sum_k |f_k^+\rangle\langle f_k^-| + \int_{\sigma_c} dE\,\rho(E)\,|f^+(E)\rangle\langle f^-(E)|. \quad (26)$$

The generalized eigenvectors appear as pairs of right and left eigenvectors. The discrete eigenvectors are called *Gamov vectors* and can be constructed by:

$$|f_k^+\rangle = \frac{1}{\psi_k}\lim_{E\to z_k}(E-z_k)R_+(E)|\psi\rangle, \quad (27)$$

$$\langle f_k^-| = \frac{1}{\psi_k}\lim_{E\to z_k}(E-z_k)\langle\psi|R_+(E), \quad (28)$$

where $|\psi\rangle$ is a suitable vector and $\psi_k = \langle f_k^+|\psi\rangle \neq 0$ is a normalization constant, such that $\langle f_k^-|f_l^+\rangle = \delta_{kl}$. By adjunction one sees that $|f_k^+\rangle \neq |f_k^-\rangle$. Furthermore we have $\langle f_k^\pm|f_k^\pm\rangle = \|f_k^\pm\| = 0$. These objects are left and right eigenvectors of the Hamiltonian H corresponding to complex eigenvalues:

$$H|f_k^+\rangle = z_k|f_k^+\rangle, \quad (29)$$

$$\langle f_k^-|H = \langle f_k^-|z_k \quad . \quad (30)$$

Since the Gamov vectors have zero norm, they all coincide in Hilbert space with the null vector, which is not allowed to be an eigenvector. Also, since H is self-adjoint, it cannot have any eigenvectors corresponding to complex eigenvalues. Concluding, the Gamov vectors cannot be elements of the Hilbert space. In fact they are distributions in a suitably chosen distribution space (see section IV B). The continuous eigenvectors can be constructed in two ways:

$$|f^\pm(E)\rangle = D_\pm(E)|E^+\rangle \Leftrightarrow \langle f^\pm(E)| = D_\mp\langle E^+|, \quad (31)$$

$$|g^\pm(E)\rangle = D_\pm(E)|E^-\rangle \Leftrightarrow \langle g^\pm(E)| = D_\mp(E)\langle E^-|. \quad (32)$$

By application to test vectors with analytic extensions to the complex plane one sees that

$$D_+(E)|E^-\rangle = |E^-\rangle \quad (33)$$

$$D_-(E)|E^+\rangle = |E^+\rangle \quad . \quad (34)$$

Hence there are two equivalent bases given by

$$B_1^+ = \{|E_n\rangle\langle E_n|, |f_k^+\rangle\langle f_k^-|, |f^+(E)\rangle\langle E^+|\}, \quad (35)$$

$$B_2^+ = \{|E_n\rangle\langle E_n|, |f_k^+\rangle\langle f_k^-|, |E^-\rangle\langle g^-(E)|\}. \quad (36)$$

Both bases can equally be used to span the Hilbert space $\mathcal{H}$. Arbitrarily we select B_1^+ and obtain a *retarded* unity decomposition

$$\mathbb{1}_+ = \sum_n |E_n\rangle\langle E_n| + \sum_k |f_k^+\rangle\langle f_k^-|, + \int_{\sigma_c} dE\,\rho(E)\,|f^+(E)\rangle\langle E^+| \quad . \quad (37)$$

In complete analogy one can modify the spectral decomposition by deformation of the integration path to $\Gamma_- = \Gamma_+^*$ in the *upper* half of the complex plane, entering the domain of $R_-(z)$ with singularities at $\sigma_- = \{z_k^*\}$. One then obtains the two bases

$$B_1^- = (B_1^+)^\dagger, \quad (38)$$

$$B_2^- = (B_2^+)^\dagger, \quad (39)$$

such that

$$|f_k^-\rangle = \frac{1}{\psi_k}\lim_{E\to z_k^*}(E-z_k^*)R_-(E)|\psi\rangle \quad (40)$$

$$\langle f_k^+| = \frac{1}{\psi_k}\lim_{E\to z_k^*}(E-z_k^*)\langle\psi|R_-(E) \quad (41)$$

$$|f^-(E)\rangle = |E^+\rangle, \quad \langle f^+(E)| = D_-(E)\langle E^+|, \quad (42)$$

$$|g^-(E)\rangle = D_-(E)|E^-\rangle, \quad \langle g^+(E)| = \langle E^-| \quad . \quad (43)$$

Arbitrarily choosing B_1^- one obtains an *advanced* unity decomposition:

$$\mathbb{1}_- = \sum_n |E_n\rangle\langle E_n| + \sum_k |f_k^-\rangle\langle f_k^+| + \int_{\sigma_c} dE\,\rho(E)\,|E^+\rangle\langle f^+(E)| \quad , \quad (44)$$

which is just the adjoint of the retarded unity decomposition, so $(\mathbb{1}_+)^\dagger \equiv \mathbb{1}_-$. Note, however, that both decompositions are equivalent representations of the unity operator, thus in the sense of an operator identity we have $\mathbb{1}_+ = \mathbb{1}_- = \mathbb{1}$.

E. Using the extended decomposition

The unity decompositions obtained in the preceding section can be used for different representations of vectors and operators. Using the retarded decomposition the Hamiltonian reads

$$H = \sum_n E_n|E_n\rangle\langle E_n| + \sum_k z_k|f_k^+\rangle\langle f_k^-| + \int_{\sigma_c} dE\,\rho(E)\,E|f^+(E)\rangle\langle E^+| \quad . \quad (45)$$

The adjoint of the above expression yields the Hamiltonian in the *advanced* decomposition. Since both decompositions are equivalent representations, one sees that $H^\dagger = H$, i.e. the Hamiltonian remains self-adjoint.

The propagator in the retarded decomposition reads

$$U(t) = \sum_n e^{-iE_nt}|E_n\rangle\langle E_n| + \sum_k e^{-iz_kt}|f_k^+\rangle\langle f_k^-| + \int_{\sigma_c} dE\,\rho(E)\,e^{-iEt}|f^+(E)\rangle\langle E^+| \quad . \quad (46)$$

Since the complex numbers z_k are located in the lower half of the complex plane, the contribution from the

Gamov vectors decays in the future. If an initial Hilbert state $|\psi\rangle$ has Gamov components, they will disappear for $t \to \infty$. So if the state has no rotating components, i.e. $\langle E_n|\psi\rangle = 0$, the whole state will disappear in the future with the decay rates of the Gamov contributions given by the imaginary part of the contributing z_k:

$$\psi_k^+ e^{-iz_k t} = \psi_k^+ e^{-\gamma_k t} e^{-i\nu_k t} \xrightarrow{t} 0 \quad , \tag{47}$$

with $\psi_k^+ = \langle f_k^+|\psi\rangle$, $z_k = \nu_k - i\gamma_k$ and $\nu_k, \gamma_k > 0$. Each contribution from a Gamov state also induces a certain energy shift, given by the real part of the z_k. The advantage of the extended spectral decomposition is getting clear now: Not only the stable frequencies can immediately be read from the spectrum, but the decay rates and the energy shifts, too. By additionally checking the amplitudes ψ_k^+ between the initial state and the Gamov vectors one has immediate access to the dissipative dynamics of the system.

F. A closer look

Apart from the contribution of the Gamov vectors one has to consider the contribution from the generalized continuous eigenvectors. Let us call it the *background contribution*. Since the decomposition involves the complex distribution $|f^+(E)\rangle = D_+(E)|E\rangle$, a test vector φ has to be introduced. The background contribution then reads:

$$\langle\varphi|\psi_{bg}(t)\rangle := \int_{\sigma_c} dE\, \rho(E)\, e^{-iEt} \langle\varphi|f^+(E)\rangle\langle E^+|\psi\rangle \tag{48}$$

$$= \int_{\sigma_c} dE\, \rho(E)\, D_+(E)\psi_+(E) e^{-iEt} \varphi_+^*(E) \tag{49}$$

where $\psi_+(E) = \langle E^+|\psi\rangle$ and $\varphi_+^*(E) = \langle\varphi|E^+\rangle$. Due to $D_+(E)$ the integration path is transformed into the curve Γ_+ below the complex eigenvalues z_k.

$$\langle\varphi|\psi_{bg}(t)\rangle = \int_{\Gamma_+} dz\, \rho(z)\, e^{-izt} \psi(z)\varphi^*(z) \quad , \tag{50}$$

where $\psi_+(z)$ and $\varphi_+^*(z)$ are the analytic continuations of respectively $\psi_+(E)$ and $\varphi_+^*(E)$ to the lower half of the complex plane (provided their existence). The curve Γ_+ is arbitrary as long as $\Gamma_+ \cup \sigma_c$ surrounds σ_+, i.e., Γ_+ is placed *below* the poles z_k, which all have negative imaginary parts. For $t > 0$, due to the exponential factor e^{-izt}, the background contribution thus becomes more and more neglectable in comparison with the pole contributions. For initial states with high decay rates, i.e. pole contributions with small imaginary parts, the background contribution may be neglected already for small times $t > 0$. This approximation is called the *pole approximation* and it is essentially equivalent to the *Wigner-Weisskopf approximation* (see [14]). The time evolution of the initial state may be approximated by an exponential decay and its energy spectrum by a Breit-Wigner distribution. This approximation is very popular, e.g. in quantum optics, and indeed in most cases it is a very good one.

G. Do divergences break time symmetry?

Obviously the above argument does not hold for negative times. Here, the contributions from the Gamov vectors diverge. In several publications of the Brussels School (see e.g. [12] or *A. Bohm* in [6]) this is an argument in favour of a broken time symmetry, since for negative times the *advanced* decomposition (44) is the better choice. However, as will be shown below, this is a rather intuitive reasoning and does not enforce a break of time symmetry.

Let us see what happens with the retarded decomposition of a Hilbert state for negative times. Of course the Gamov contributions now diverge, but they are compensated by the background contribution. For $t \to -\infty$ the background integral (50) gains influence, since the integration path Γ_+ is placed *below* the complex eigenvalues z_k. The same argument, that for increasing $t > 0$ the background contribution can be neglected in comparison with the pole contributions, is turned upside down for $t < 0$. The smaller imaginary part of Γ_+ induces a higher divergence than the contribution of the poles. By construction their divergences cancel each other, since the sum of both yields the contribution of the standard continuous eigenvectors (see eq. (26)), so a divergence of an initial Hilbert state backwards in time is prevented. The divergence of the Gamov contributions is even more than cancelled: If a Hilbert state decays in the future, it will also decay in the past. To see this one can use the advanced decomposition (44) to investigate the system's evolution to the past and one would find a completely symmetric situation with majorizing pole contributions decaying backwards in time.

The situation is different if a Gamov vector $|f_k^+\rangle$ is taken as the initial state. Now there is only one pole contribution z_k decaying in the future and diverging in the past. But Gamov vectors are only "existing" in the spectral representation of Hilbert states and they themselves do not refer to elements of physical reality. They share this feature with all other "generalized eigenstates" appearing in spectral decompositions. As constituted in the axiomatic foundations of quantum mechanics a physically realizable state is represented by a Hilbert vector (actually a family of Hilbert vectors normalized to unity and differing only in phase). Gamov states are no Hilbert vectors, so their properties are not expected to be physically meaningful.

Concluding, both decompositions are equivalent as long as Hilbert states are concerned, but the use of the retarded decomposition is more *intuitive* for $t > 0$. However, this should not be taken as the reason for a broken time symmetry. A more convincing argument in favour of

a broken time symmetry is the splitting of *test spaces*. As we have seen in (50), analytic continuations of the test functions are needed to have the decompositions well-defined. In section IV we will get back to this point.

H. Perturbation theory

Besides the advantages pointed out in section II E we now face another important advantage of the Brussels School's formalism. Perturbation theory can be applied even in cases where standard quantum mechanics fails. Those cases are featured by the phenomenon of instability, which is strongly connected to the sensitivity of a system towards small perturbations. Let the system's Hamiltonian be of the form

$$H_\lambda = H_0 + \lambda W \quad , \tag{51}$$

where W is the perturbation operator, switched on by the perturbation parameter $\lambda \in [0,1]$, and H_0 is the unperturbed part of the Hamiltonian, whose spectral decomposition is known and reads

$$H_0 = \sum_n \omega_n |\omega_n\rangle\langle\omega_n| + \int_{\sigma_c} d\omega\, \rho_0(\omega)\, \omega |\omega\rangle\langle\omega| \quad . \tag{52}$$

To simplify the discussion let the spectrum of H_0 be non-degenerate, so $\omega_n \neq \omega_m$ for $n \neq m$. As long as the perturbation strength λ is not explicetely needed, it is set to 1 and $H_{\lambda=1}$ is written as H. The spectral decomposition of H is yet unknown and reads in general

$$H = \sum_n E_n |u_n\rangle\langle u_n| + \int_{\sigma_c} d\omega\, \rho(\omega)\, \omega |u^\pm(\omega)\rangle\langle u^\pm(\omega)|, \tag{53}$$

where the sum is taken over the discrete spectrum σ_d and the integration is performed over the continuous spectrum σ_c of H.

The continuous spectrum σ_c is not affected by the perturbation (provided the perturbation operator W is H_0-compact, which is assumed here) and there is an identity mapping of perturbed and unperturbed continuous eigenvalues, so in both cases the integration is performed over σ_c. The discrete case is different. Switching to *Brioullin-Wigner* perturbation theory let us define pairs of orthogonal projection operators

$$P_n := |\omega_n\rangle\langle\omega_n| \quad \text{and} \tag{54}$$

$$Q_n := \mathbb{1} - P_n \quad . \tag{55}$$

Furthermore let the perturbed eigenvector $|u_n\rangle$ of H be not normalized to 1 but rather let $\langle u_n|\omega_n\rangle = 1$, such that $P_n|u_n\rangle = |\omega_n\rangle$. Applying these projections to the perturbed eigenvalue equation $H|u_n\rangle$ one obtains the *Brioullin-Wigner formulas* for the shifted eigenstate $|u_n\rangle$ and the shifted energy E_n:

$$|u_n\rangle = |\omega_n\rangle + Q_n \frac{\lambda}{E_n - H_0} Q_n W |u_n\rangle \quad , \tag{56}$$

$$E_n = \omega_n + \lambda \langle\omega_n|W|u_n\rangle \tag{57}$$

Iteration leads to the corresponding perturbation series

$$|u_n\rangle = \sum_{p=0}^{\infty} \left\{ Q_n \frac{\lambda}{E_n - H_0} Q_n W \right\}^p |\omega_n\rangle, \tag{58}$$

$$E_n = \omega_n + \lambda \sum_{p=0}^{\infty} \langle\omega_n|W \left\{ Q_n \frac{\lambda}{E_n - H_0} Q_n W \right\}^p |\omega_n\rangle. \tag{59}$$

Take a closer look at the above formulas (58) and (59). They are only valid if the expression

$$Q_n \frac{1}{E_n - H_0} Q_n = \sum_{m \neq n} \frac{|\omega_m\rangle\langle\omega_m|}{E_n - \omega_m} + \int d\omega\, \rho(\omega)\, \frac{|\omega\rangle\langle\omega|}{E_n - \omega} \tag{60}$$

is well-defined. Here *resonance* appears as a major obstacle. There are two different types of resonance making a perturbation expansion of eigenstates and eigenvalues impossible:

1. **discrete resonance**: The eigenvalue ω_n may be shifted in the course of the perturbation to a neighboured eigenvalue of H_0 (see fig. 6a). Expression (60) is no longer defined and the corresponding perturbation series diverges on account of the summation term.

2. **continuous resonance**: If the eigenvalue ω_n lies next to the continuous spectrum of H_0, it may be shifted there (see fig. 6b). Now the integral term in (60) causes a divergence of the perturbation series.

In both cases the perturbation expansion is limited to a finite convergence radius of the perturbation parameter λ . Outside its range the shifted eigenvalue disappears from the spectrum of H_λ and the mapping from the unperturbed to the perturbed spectrum is no longer one-to-one (see fig. 7).

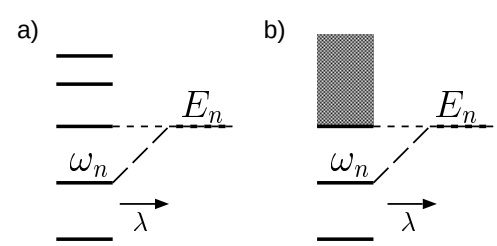

FIG. 6. a) discrete resonance. b) continuous resonance

Now regard the case of discrete unperturbed eigenvalues *embedded* in the continuous spectrum. Here the convergence radius of λ reduces to zero, i.e. the perturbation series are no longer analytic in λ. An arbitralily small perturbation induces continuous resonance. As a consequence embedded states get unstable and start to decay. Decaying states cannot be part of the spectral decomposition of H_λ, they disappear from there and cannot be reconstructed for $\lambda \to 0$, i.e. $H_\lambda \not\to H_0$. Hence perturbation theory is not aplicable.

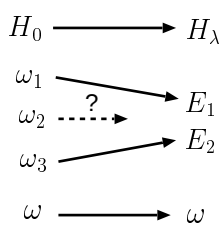

FIG. 7. In the course of the perturbation the continuous eigenvalues remain unaffected, while the discrete eigenvalues may disappear from the spectrum. In this case the mapping between the discrete spectra is no longer one-to-one and the perturbation series cannot be analytic.

There is a way out: One has to include unstable states, i.e. Gamov vectors, into the spectral decomposition of H_λ. In terms of perturbation theory the Gamov vectors can be constructed by modified Brioullin-Wigner equations:

$$|f_k^\pm\rangle = |\omega_k\rangle + \lim_{E\to z_k^\pm} Q_k \frac{\lambda}{E - H_0 \pm i\epsilon} Q_k W |f_k^\pm\rangle \quad , \tag{61}$$

$$z_k^\pm = \omega_k + \lambda \langle \omega_k | W | f_k^\pm \rangle \quad , \tag{62}$$

where $z_k^+ = z_k$ are the singularities of R_+ on the lower half of the complex plane and $z_k^- = z_k^*$ are those of R_- on the upper half. There is a one-to-one mapping between the disappearing discrete eigenvalues ω_k and the complex eigenvalues z_k. Iteration leads to the corresponding perurbation series

$$|f_k^\pm\rangle = \lim_{E\to z_k^\pm} \sum_{p=0}^{\infty} \left\{ Q_k \frac{\lambda}{E - H_0 \pm i\epsilon} Q_k W \right\}^p |\omega_k\rangle, \tag{63}$$

$$z_k^\pm = \omega_k + \lambda \langle \omega_k | W | f_k^\pm \rangle \quad . \tag{64}$$

The generalized continuous eigenstates are

$$|f^+(\omega)\rangle = D_+(\omega)|u^+(\omega)\rangle \tag{65}$$

$$\langle f^-(\omega)| = \langle u^+(\omega)| \quad , \tag{66}$$

with the complex distribution D_+ defined in (22). The standard continous eigenvectors can be constructed using the *Lippmann-Schwinger equation*

$$|u^+(\omega)\rangle = |\omega\rangle + \frac{\lambda}{\omega - H_0 + i\epsilon} W |u^+(\omega)\rangle \tag{67}$$

or its iteration, the *Born series*:

$$|u^+(\omega)\rangle = \sum_{p=0}^{\infty} \left\{ \frac{\lambda}{\omega - H_0 + i\epsilon} W \right\}^p |\omega\rangle \quad . \tag{68}$$

Take a closer look at the construction of Gamov states in eq. (61). The divergences due to continuous resonance are prevented by introducing a small complex shift in the denominator and analytic continuation to the second Riemann sheet. As a consequence, the energy eigenvalues are shifted to respectively the lower and upper complex plane, inducing exponential decay and Breit-Wigner energy distribution of the corresponding Gamov states. The expressions are still analytic in λ, so perturbation theory can be applied. This is a major advantage of the Brussels School's formalism.

III. EXAMPLE: THE FRIEDRICHS MODEL

The Friedrichs model (K. Friedrichs 1948, see [8]) is the simplest model involving instability. Here one single discrete state is coupled to a continuum of states by an interaction Hamiltonian W. A physical analogon to this model is e.g. the *Wigner-Weisskopf model* (Wigner and Weisskopf 1930, see [14]) of a twolevel atom coupled to the vacuum field. Another example is the *Auger effect* of autoionisation (see e.g. [11]).

The total Hamiltonian is of the form

$$H = H_0 + W \quad , \tag{69}$$

$$\text{where } H_0 = \omega_1 |1\rangle\langle 1| + \int_0^\infty d\omega\, \omega\, |\omega\rangle\langle\omega| \quad , \tag{70}$$

$$W = \int_0^\infty d\omega \left\{ W(\omega)|\omega\rangle\langle 1| + W^*(\omega)|1\rangle\langle\omega| \right\} \quad . \tag{71}$$

Using the *second resolvent identity*

$$R = R_0 + RWR_0 \quad , \tag{72}$$

with the resolvent $R_0(z) = \frac{1}{z - H_0}$ of the free Hamiltonian H_0 and the resolvent $R(z) = \frac{1}{z-H}$ of the total Hamiltonian. The resolvent $R(z)$ can be obtained by applying it to the free states $|1\rangle$ and $|\omega\rangle$ and doing some rearrangement:

$$\begin{aligned} R(z) = \frac{1}{\eta(z)} & \left[|1\rangle + \int_0^\infty d\omega\, \frac{W(\omega)}{z-\omega} |\omega\rangle \right] \\ & \left[\langle 1| + \int_0^\infty d\omega\, \frac{W^*(\omega)}{z-\omega} \langle\omega| \right] \\ & + \int_0^\infty d\omega \frac{1}{z-\omega} |\omega\rangle\langle\omega| \quad . \end{aligned} \tag{73}$$

The complex function

$$\eta(z) = z - \omega_1 - \int_0^\infty d\omega \frac{|W(\omega)|^2}{z-\omega} \tag{74}$$

has analytic extensions $\eta_\pm(\omega) = \eta(\omega \pm i\epsilon)$ from above and below to the real axis. The zeros of η on the second Riemann sheet define the complex poles of the resolvent:

$$\eta_+(z_1) = 0, \quad \eta_-(z_1^*) = 0 \quad . \tag{75}$$

The pole z_1 can be obtained by numerically calculating the complex zero of $\eta_+(z)$. In first order one gets

$$z_1 \approx \omega_1 + \mathcal{P}\int_0^\infty d\omega\, \frac{|W(\omega)|^2}{\omega_1 - \omega} - i\pi|W(\omega_1)|^2 \quad . \tag{76}$$

The Gamov vectors can be obtained using eqns. (27) and (28):

$$|f_1^+\rangle = \frac{1}{c_1}\lim_{E\to z_1}(E - z_1)R_+(E)|1\rangle \tag{77}$$

$$= \frac{1}{\sqrt{\eta_+{}'(z_1)}}\left[|1\rangle + \int_0^\infty d\omega\, \frac{W(\omega)}{[z_1 - \omega]_+}|\omega\rangle\right] \tag{78}$$

$$\langle f_1^-| = \frac{1}{c_1}\lim_{E\to z_1}(E - z_1)\langle 1|R_+(E) \tag{79}$$

$$= \frac{1}{\sqrt{\eta_+{}'(z_1)}}\left[\langle 1| + \int_0^\infty d\omega\, \frac{W^*(\omega)}{[z_1 - \omega]_+}\langle\omega|\right] \quad , \tag{80}$$

where the complex distribution is defined by

$$\int_0^\infty d\omega\, \frac{\varphi(\omega)}{[z_1 - \omega]_+} := \lim_{E\to z_1}\int_0^\infty d\omega\, \frac{\varphi(\omega)}{E - \omega + i\epsilon} \quad . \tag{81}$$

The standard outgoing states can be constructed using eq. (14):

$$|u^+(\omega)\rangle = \frac{1}{c(\omega)}\frac{i\epsilon}{E - H + i\epsilon}|\omega\rangle \tag{82}$$

$$= |\omega\rangle + \frac{W^*(\omega)}{\eta_+(\omega)} \times$$

$$\times \left[|1\rangle + \int_0^\infty d\omega'\, \frac{W(\omega')}{\omega - \omega' + i\epsilon}|\omega\rangle\right] \quad . \tag{83}$$

Using eq. (31) the generalized continuous eigenvectors read

$$|f_+(\omega)\rangle = D_+(\omega)|u^+(\omega)\rangle \tag{84}$$

$$= |\omega\rangle + D_+(\omega)\frac{W^*(\omega)}{\eta_+(\omega)} \times$$

$$\times \left[|1\rangle + \int_0^\infty d\omega'\, \frac{W(\omega')}{\omega - \omega' + i\epsilon}|\omega\rangle\right] \quad , \tag{85}$$

$$\langle f^-(\omega)| = \langle u^+(\omega)| \tag{86}$$

$$= \langle\omega| + \frac{W(\omega)}{\eta_-(\omega)} \times$$

$$\times \left[\langle 1| + \int_0^\infty d\omega'\, \frac{W^*(\omega')}{\omega - \omega' - i\epsilon}\langle\omega|\right] \quad , \tag{87}$$

where the complex distribution D_+ is defined by (22) with the curve Γ_+ leading from 0 to ∞ below z_1.

In the pole approximation, i.e. neglecting the background contribution from the continuous eigenvectors, the initial state $|1\rangle$ decays with a decay rate Γ given by two times the imaginary part of z_1,

$$P_1(t) = |\langle 1|U(t)|1\rangle|^2 \approx e^{-\Gamma t}, \tag{88}$$

$$\text{where} \quad \Gamma = 2 * \operatorname{Im} z_1 \approx 2\pi|W(\omega_1)|^2, \tag{89}$$

which is in agreement with Fermi's Golden Rule.

IV. TIME SYMMETRY

A. The rigged Hilbert space

When dealing with infinite dimensions, the Hilbert space appears to be too small in the following sense: Position and momentum operator have no Hilbert eigenvectors and Dirac's bra-ket formalism is mathematically not justified. To correct this problem, the Hilbert space must be enlarged to include *improper states* like δ-functions and plane waves. The framework to enable these features is given by the theory of the *Gelfand triplet*, also called the *rigged Hilbert space* (RHS).

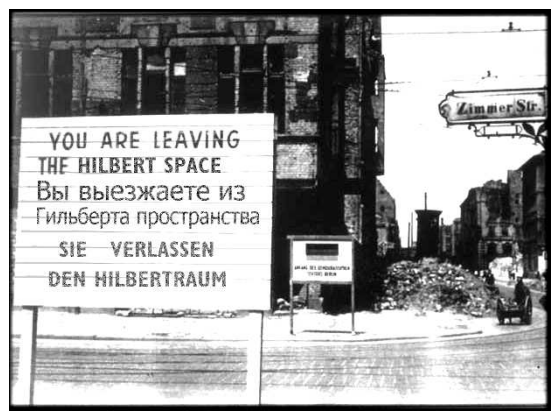

FIG. 8. To deal with improper states like δ-functions and plane waves and to make Dirac's bra-ket formalism work, one has to leave the Hilbert space.

The concept is the following (comp. e.g. [5]). Take the Hilbert space $\mathcal{H} = L^2$ of squared integrable functions and find a suitable test space $\Phi \subset \mathcal{H}$ with the properties

- Φ is a locally convex topological vector space,
- Φ is complete with respect to its own topology,
- Φ is dense in $\mathcal{H}$,

such that the topological dual $\Phi^\dagger$ of Φ, consisting of all linear continuous functionals on Φ, called *distributions*, includes the desired improper states. The Hilbert space itself is his own topological dual, i.e. $\mathcal{H}^\dagger = \mathcal{H}$. For any test space Φ being smaller than $\mathcal{H}$, the Gelfand triplet

$$\Phi \subset \mathcal{H} \subset \Phi^\dagger \tag{90}$$

makes it possible to extend the bracket $\langle\chi|\varphi\rangle$ to all pairs $\varphi \in \Phi$, $\chi \in \Phi^\dagger$ by

$$\langle\chi|\varphi\rangle := \chi(\varphi) \tag{91}$$
$$\langle\varphi|\chi\rangle := \chi^*(\varphi) \quad . \tag{92}$$

On pairs of Hilbert vectors the bracket conicides with the scalar product in $\mathcal{H}$. The "kets" and "bras" are now identified by linear functionals on the opposite dual space, i.e.

$$|\xi\rangle := \langle\cdot|\xi\rangle \tag{93}$$
$$\text{and} \quad \langle\xi| := \langle\xi|\cdot\rangle \quad , \tag{94}$$

where $\xi \in \mathcal{H}, \Phi$ or $\Phi^\dagger$. An operator A can be extended to the distribution space $\Phi^\dagger$ using

$$\langle A\chi|\varphi\rangle = \langle\chi|A^\dagger\varphi\rangle \quad . \tag{95}$$

Hence A can only be extended to $\Phi^\dagger$ if its adjoint $A^\dagger$ is defined on and does not lead out of the test space Φ:

$$A^\dagger\Phi \subset \Phi \quad . \tag{96}$$

The test space of standard quantum mechanics is the Schwartz space $\mathcal{S}$ of rapidly decreasing functions, defined by

$$\mathcal{S} := \{f \in C^\infty | \sup_x |x^n \partial_x^m f(x)| < \infty \ \forall n, m\} \quad . \tag{97}$$

The Schwartz space is a physically convenient test space, since here position and momentum operator are everywhere defined, they fulfill (96), they are self-adjoint and have their eigenvectors among the *tempered distributions* of $\mathcal{S}^\dagger$. Furthermore, they keep their real spectrum, which makes the RHS $(\mathcal{S}, L^2, \mathcal{S}^\dagger)$ be called a *tight rigged* Hilbert space. Another popular test space is the space $\mathcal{D}$ of C^∞-functions with compact support. But $\mathcal{D}$ is not tight rigged, since the momentum operator obtains a complex spectrum with complex plane waves $e^{izx} \in \mathcal{D}^\dagger$ as eigenvectors.

B. Breaking time symmetry

Now we turn to the RHS of the Brussels School. As already stated in section II D the definition of generalized eigenvectors is only possible if the test functions can be analytically continued to whether the lower or the upper half of the complex plane. The retarded right eigenvectors $|f_k^+\rangle$ and $|f^+(E)\rangle$ involve complex distributions continuating the test functions $\varphi^*(E) = \langle\varphi|E\rangle$ to the lower half of the complex plane, denoted by $\mathbb{C}_-$. There is a class of functions fulfilling this condition: the Hardy class H_-^2 from below (for detailed information on Hardy classes see [7]). If $\varphi^*(E)$ is in H_-^2 then its complex conjugate $\varphi(E) = \langle E|\varphi\rangle$ is in the Hardy class H_+^2 from above, whose members can be analytically continuated to the upper half of the complex plane, denoted by $\mathbb{C}_+$. In detail: The function $\varphi(E)$ is in $H_\pm^2$ if and only if it has an analytic continuation to $\mathbb{C}_\pm$, such that there is a $C < \infty$ and

$$\sup_{y>0} \int_{-\infty}^{\infty} dE\, |\varphi(E \pm iy)|^2 < C \quad . \tag{98}$$

Thus, restricted to the real line, Hardy functions are L^2-functions. An equivalent definition can be given using the *Paley-Wiener theorem*: The Hardy spaces $H_\pm^2$ are formed by the inverse Fourier transforms of L^2-functions with support on respectively the positive and negative semiaxis $\mathbb{R}_\pm$:

$$H_\pm^2 = \mathrm{F}^{-1}\{L^2(\mathbb{R}_\pm)\} \quad . \tag{99}$$

For physical convenience it is necessary, that the test functions are also in the Schwartz class $\mathcal{S}$. Furthermore, their energy representation can be restricted to the positive semiaxis, since energy is bounded from below by zero. Altogether, the test spaces of the Brussels School are defined by

$$\Phi_\pm := (H_\pm^2 \cap \mathcal{S})\big|_{\mathbb{R}_+} \quad . \tag{100}$$

The topological duals $\Phi_\pm^\dagger$ then include the complex distributions used in the generalized eigenvectors. The formalism of the Brussels School can be applied in the RHS

$$\Phi_\pm \subset \mathcal{H} \subset \Phi_\pm^\dagger \quad . \tag{101}$$

Since there are *two* RHS's, one has to investigate how to deal with them. The retarded unity decomposition (37) contains the dyadic products $|f_k^+\rangle\langle f_k^-|$. Applying test vectors φ_+ and φ_- to both sides one obtains

$$\langle\varphi_+|f_k^+\rangle\langle f_k^-|\varphi_-\rangle \quad . \tag{102}$$

The above expression only makes sense, if $\varphi_+^*(E)$ and $\varphi_-(E)$ are both in Φ_-, thus $\varphi_+(E)$ must be in Φ_+. Hence the instructions for computing brackets while using the retarded unity decomposition are: On the left hand you have to use Φ_+-vectors and on the right hand Φ_--vectors. However, since both test spaces are dense in $\mathcal{H}$, you would not have to care too much, if there was not a significant subtlety: time symmetry is broken. To see this we investigate the time evolution of a test vector $\varphi_- \in \Phi_-$:

$$\varphi_-^t(E) = e^{-iEt}\varphi_-(E) \quad . \tag{103}$$

Since $\varphi(E)$ is in H_-^2, there is an analytic continuation $\varphi_-(E - iy)$ to $\mathbb{C}_-$ and so there is one for its propagated counterpart, given by

$$\varphi_-^t(E - iy) = e^{-yt}e^{-iEt}\varphi_-(E - iy) \quad . \tag{104}$$

Obviously, condition (98) is violated for φ_-^t and $t < 0$, thus time evolution leads out of the test space for $t < 0$. As a consequence test functions in Φ_- can only be propagated to the future. Analogically, test functions in Φ_+ can only be propagated to the past. Using condition (96)

one finds in addition that the extension of the unitary propagator $U(t)$ to the distribution spaces $\Phi_+^\dagger$ and $\Phi_-^\dagger$ is only possible for respectively $t > 0$ and $t < 0$. So retarded Gamov vectors $|f_k^+\rangle$ in $\Phi_+^\dagger$ "propagate" (as part of the spectral decomposition of Hilbert vectors) only to the future and advanced Gamov vectors $|f_k^-\rangle$ in $\Phi_-^\dagger$ propagate only to the past. The unitary propagator group $\mathcal{U}$ hence splits into a semigroup $\mathcal{U}_+$ propagating to the future (and applying to vectors in Φ_- and $\Phi_+^\dagger$) and a second one $\mathcal{U}_-$ propagating to the past (and applying to vectors in Φ_+ and $\Phi_-^\dagger$). This feature is called by the Brussels School the *intrinsic irreversibility* of quantum mechanics and it is identified with a microscopic arrow of time.

C. Physical justification

Apart from pure mathematics there is a physical reasoning presented by members of the Brussels School who try to derive the special choice of the two Hardy classes from the assumption of *causality* (see e.g. Schulte and Twarock in [6] or Antoine, Bohm and Harshman in [4], from where the citations below are taken). This is done the following way.

1. Argument

Starting point is a special assumption of *causality* which is called the "preparation→registration arrow of time":

> "Time translation of the registration apparatus relative to the preparation apparatus makes sense only by an amount of $t \geq 0$."

This is translated into the language of quantum mechanics to a so-called "quantum mechanical arrow of time":

> "A state $\phi^+(t)$ must be prepared before an observable $|\psi^-\rangle\langle\psi^-| = |\psi^-(0)\rangle\langle\psi^-(0)|$ can be measured in that state, i.e. $\phi^+ = \phi^+(0)$ must be prepared during $t \leq 0$."

Interpreting measurement formally as a scattering experiment, the prepared state ϕ^+ is identified with an incoming state and the measured state ψ^- with an outgoing state (see fig. 9). Survival probabilities of the initial (i.e. prepared) state are thus calculated by transition probabilities of the incoming and outgoing state:

$$P(t) = |\langle\phi^+|e^{-iHt}|\psi^-\rangle|^2 \quad \text{for } t \geq 0, \tag{105}$$

$$P(t) = 0 \quad \text{for } t < 0. \tag{106}$$

Using the energy decomposition this implies

$$\int dE\, \rho(E)\, e^{-iEt}\phi^+(E) = 0 \quad \text{for } t > 0 \tag{107}$$

$$\text{and} \int dE\, \rho(E)\, e^{-iEt}\psi^+(E) = 0 \quad \text{for } t < 0. \tag{108}$$

Using the Paley-Wiener theorem (99) one is led to the desired conclusion

$$\phi^+ \in H_+^2, \quad \psi^- \in H_-^2 \quad . \tag{109}$$

Hence, founding on the given formulation of causality the only correct choice of a rigged Hilbert space is the choice of the two RHS's of the Brussels School. In other words: Standard quantum mechanics has not yet found a microscopic arrow of time because it has been incomplete in its axiomatic foundation.

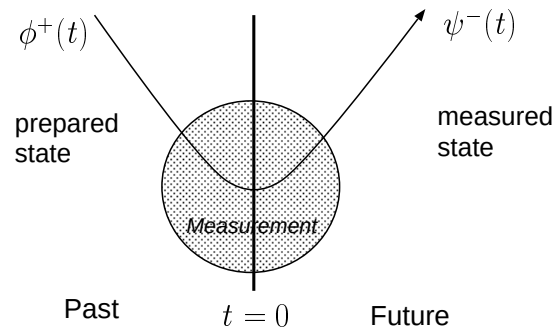

FIG. 9. Measurement as a scattering experiment. The prepared state is an incoming state ϕ^+, the measured state is an outgoing state ψ^- leaving the interaction region where the measurement takes place (grey circle). The survival amplitude of the prepared state is the transition amplitude between incoming and outgoing state.

2. Critics

It is obvious even by the choice of words ("before", "after", "arrow of time"), that the given causality claim already contains an arrow of time. Hence *deriving* an arrow of time by the use of the mathematical conditions based upon this claim is a circular argument of the following form:

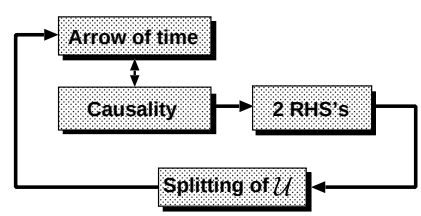

FIG. 10. Trying to derive an arrow of time from the causality assumption of the Brussels School is a circular argument, since the assumption already contains an arrow of time.

It is possible, however, to interpret the special choice of the two RHS's as an *analogon* to a microscopic arrow of time, a *mathematical mirror image* of the empirically motivated division between past and future, but one must not take the cause for the consequence.

Nevertheless, this point of view is not so clearly taken by some members of the Brussels School. For example, *J. P. Antoine* declares in [6]:

> "Since the preparation of the state ϕ^+ must be completed (at time $t = 0$) before the detection begins, there is an intrinsic asymmetry between past and future, that is, one may define an arrow of time."

D. Regaining time symmetry

In order to avoid the circular argument mentioned in the preceding section one could instead demonstrate that the special choice of the two RHS's is *necessary* for the correct mathematical implementation of Gamov states. One could then regard the splitting of the unitary time evolution group into two semigroups as enforced by the mathematical concept. This point of view is taken by *A. Bohm* and *N.L. Harshman* in [4] :

> "Philosophizing alone would not be enough to take a semigroup instead. To arrive at the semigroup, we start from the empirically desirable properties of Gamov resonance states and let mathematics determine the path."

The above mentioned properties are given by

$$H|f_k^+\rangle = (E_R - i\Gamma/2)|f_k^+\rangle \quad , \tag{110}$$

$$|f_k^+(t)\rangle = e^{-iHt}|f_k^+\rangle = e^{-iE_Rt}e^{-i\frac{\Gamma}{2}t}|f_k^+\rangle \quad , \tag{111}$$

with $E_R, \Gamma > 0$. Starting from these conditions, following the reasoning of section IV B, one is led to the two RHS's with broken time symmetry. As will be shown below this is a false conclusion.

The argumentation redrawn in section IV B is not valid if a rigged Hilbert space can be found, wherein Gamov vectors are included and where time symmetry is preserved. Start with the space $\mathcal{D}$ of C^∞-functions with compact support. As already mentioned, this space is a perfect test space fulfilling the requirements given in section IV A. Furthermore we have

$$\mathcal{D} \subset \mathcal{S} \quad . \tag{112}$$

Now regard the space $\mathcal{Z}$ of inversely Fourier transformed $\mathcal{D}$-functions:

$$\mathcal{Z} := \mathrm{F}^{-1}\{\mathcal{D}\} \quad . \tag{113}$$

Since the inverse Fourier transform is a one-to-one mapping on the Schwartz space $\mathcal{S}$, we have

$$\mathcal{Z} \subset \mathcal{S} \quad . \tag{114}$$

Let $\tilde{\varphi}(s)$ be a $\mathcal{D}$-function. Its inverse Fourier transform $\varphi(E) \in \mathcal{Z}$ reads

$$\varphi(E) = \frac{1}{2\pi}\int_{-\infty}^{\infty} ds\, e^{iEs}\tilde{\varphi}(s) = \frac{1}{2\pi}\int_K ds\, e^{iEs}\tilde{\varphi}(s), \tag{115}$$

where K is the compact support of $\tilde{\varphi}(s)$. The analytic continuation of $\varphi(E)$ to the complex plane exists and is an entire function, given by

$$\varphi(E+iy) = \frac{1}{2\pi}\int_K ds\, e^{-ys}e^{iEs}\tilde{\varphi}(s) \quad , \tag{116}$$

for all $E, y \in \mathbb{R}$ (see [13], theorem 7.22). Since the inverse Fourier transform is a linear continuous one-to-one mapping, the transformed topology $\tau_{\mathcal{D}}$ of $\mathcal{D}$,

$$\tau_{\mathcal{Z}} := \mathrm{F}^{-1}\{\tau_{\mathcal{D}}\} \quad , \tag{117}$$

transfers all topological properties from $\mathcal{D}$ to $\mathcal{Z}$. Thus, $\{\mathcal{Z}, \tau_{\mathcal{Z}}\}$ is a topological vector space fulfilling all requirements of a test space in $L^2(\mathbb{R})$. Since $\mathcal{Z}$ contains functions being analytic in the whole complex plain, the topological dual $\mathcal{Z}^\dagger$ contains the retarded Gamov vectors defined by (110) and (111). Furthermore, it contains also the *advanced* Gamov vectors $|f_k^-\rangle$ with eigenvalues z_k^* in the upper half of the complex plane, as well as any other generalized eigenvector used in the extended spectral decompositions (37) and (44). Because of relation (114) all $\mathcal{Z}$-functions are $\mathcal{S}$-functions, so $\mathcal{Z}$ is already a physical convenient test space and standard quantum mechanics is applicable, too. Since $\mathcal{D} \not\subset \mathcal{S}(\mathbb{R}_\pm) \not\subset \mathcal{D}$ the space $\mathcal{Z}$ does neither include any of the test spaces $\Phi_\pm$ nor is it part of it, i.e.

$$\mathcal{Z} \not\subset \Phi_\pm \not\subset \mathcal{Z} \quad , \tag{118}$$

but of course $\mathcal{Z} \cap \Phi_\pm \neq \emptyset$. So $\mathcal{Z}$ is just a different test space, whose topological duals include any of the desired distributions.

However, there is no intrinsic irreversibility. Let the $\mathcal{D}$-function $\tilde{\varphi}(s)$ have a compact support bounded by the finite interval $[a, b]$. Its inverse Fourier transform $\varphi(E)$ can be propagated in time yielding $\varphi_t(E) = e^{-iEt}\varphi(E)$, whose Fourier transform,

$$\tilde{\varphi}_t(s) = \int_{-\infty}^{\infty} dE\, e^{-iEs}e^{-iEt}\varphi(E) = \tilde{\varphi}(s+t) \quad , \tag{119}$$

has a compact support bounded by the finite interval $[a+t, b+t]$, thus it remains compact for all $t \in \mathbb{R}$ and $\tilde{\varphi}_t(s)$ stays in $\mathcal{D}$, so $\varphi_t(E)$ stays in $\mathcal{Z}$. Hence the propagator $U(t)$ does not lead out of the test space for any $t \in \mathbb{R}$. Consequently, the unitary propagator group $\mathcal{U} = \{U(t)\}$ can be extended to the distribution space $\mathcal{Z}^\dagger$ without any splitting. The support of $\mathcal{Z}$-functions can be restricted

to the positive semiaxis, due to the positivity of energy, and the RHS

$$\left(\mathcal{Z} \subset L^2 \subset \mathcal{Z}^\dagger\right)\Big|_{\mathbb{R}_+} \tag{120}$$

is thus a suitable mathematical framework for the concepts presented in this paper. Any desired unity decomposition including Gamov vectors, retarded or advanced, can equivalently be used. As far as Hilbert states are concerned, no unphysical behaviour is predicted and any calculated physical quantity is numerically identical to the one calculated by standard methods. In case of unstable systems, though, the use of the presented methods bears some significant advantages compared to the standard methods.

V. CONCLUSION

The quantum mechanical formalism, developped by the Brussels School, offers a comfortable treatment of unstable systems, where standard quantum mechanics requires a lot more effort. The generalized spectral decompositions can be interpreted in a physically intuitive manner and they directly yield important physical quantities like decay rates and energy level shifts. Perturbation expansions become possible in cases, where standard quantum mechanics fails.

However, in contrast to the claim of the Brussels School, the implementation of a microscopic arrow of time turns out to be artificial, as there are no reasons for it apart from *ad hoc* causality assumptions being equivalent to the merely axiomatic postulation of an arrow of time. The claimed broken time symmetry is based upon a special choice of two rigged Hilbert spaces. The physical motivation to chose these spaces already makes use of an arrow of time, so it is logically impossible to derive the arrow of time that way. The mathematical motivation is founded on the use of Gamov vectors, but as shown by a counter example this does not imply the need for the two rigged Hilbert spaces. Instead, one single rigged Hilbert space can be constructed, being physically and mathematically convenient, wherein the formalism of the Brussels School is fully justified and where time symmetry is still preserved.

VI. ACKNOWLEDGEMENTS

Above all I would like to thank F. Petruccione, H.-P. Breuer and M. Bordemann, as well as M. Wilkens for stimulating discussions and editorial advice. I also thank all other people talking with me about the topic of this paper and contributing in many ways to its completion.

[1] I. Antoniou and I. Prigogine. Intrinsic irreversibility an integrability of dynamics. *Physica A*, 192:443–464, 1993.

[2] I. Antoniou and S. Tasaki. Generalized spectral decomposition of mixing dynamical systems. *Int. J. of Qu. Ch.*, 45:2718, 1993.

[3] E. Balslev and J.M. Combes. Spectral properties of many-body schrödinger operators with dilation-analytic interactions. *Commun. Math. Phys.*, 22:280–294, 1971.

[4] A. Bohm, H.-D. Doebner, and P. Kielanowski, editors. *Irreversibility and Causality*. Springer, 1998.

[5] A. Bohm and M. Gadella. *Dirac Kets, Gamow Vectors and Gel'fand Triplets*. Springer, 1989.

[6] H.-D. Doebner, V. K. Dobrev, and P. Nattermann, editors. *Nonlinear, Deformed and Irreversible Quantum Systems*. World Scientific, 1995.

[7] P. Duren. *Theory of H^p spaces*. Academic Press, 1970.

[8] K. Friedrichs. On the pertubation of continuus spectra. *Commun. Pure Appl. Math*, 1:361–406, 1948.

[9] D. Giulini, E. Joos, C. Kiefer, I.-O. Stamatescu, and H.-D. Zeh. *Decoherence and the Appearance of a Classical World in Quantum Theory*. Springer, 1996.

[10] A. Likhoded and G. Pronko. Possible origin of extra states in particle physics. *Int. J. of Th. Phys.*, 36(11):2335, 1997.

[11] A. Peres. *Quantum Theory: Concepts and Methods*. Kluwer Academic Publishers, 1995.

[12] T. Petrosky, I. Prigogine, and S. Tasaki. Quantum theory of non-integrable systems. *Physica A*, 173:175–242, 1991.

[13] W. Rudin. *Functional Analysis*. McGraw-Hill, 1991,1973.

[14] V. Weisskopf and E. Wigner. *Berechnung der natürlichen Linienbreite auf Grund der Diracschen Lichttheorie*, volume 15. Z. Phys., 1930.

[15] H.-D. Zeh. *The Physical Basis of the Direction of Time*. Springer, 1992.