Quantum Walks Assisted Bidirectional Remote State Preparation

K. K. Naseeda
Department of Physics, Government College Malappuram, Kerala 676509, India

Jumana Muhammed Abdul Asharaf
Department of Physics, Farook College(Autonomous), Calicut, Kerala 673632, India

N. C. Randeep
Department of Physics, Government Arts and Science College, Meenchanda, Calicut, Kerala 673018, India
Department of Physics, SARBTM Govt. College, Koyilandy, Kerala 673307, India

(Dated: March 10, 2026)

arXiv:2603.06596v1 [quant-ph] 8 Feb 2026

We present a scheme for bidirectional remote state preparation (BRSP) using quantum walks on two independent one-dimensional lattices and two independent cycles with two and four vertices, employing nearest-neighbor jumps with coin outcomes. The protocol is implemented in two distinct ways: one without the involvement of a controller and the other assisted by a controller . In this approach, the quantum walk dynamics generate entanglement during the remote state preparation process, thereby eliminating the need for any pre-shared initial entanglement between the communicating parties. Finally, we show that the bidirectional remote state preparation schemes based on quantum walks on a two-vertex and four-vertex system exhibit consistent behavior under the respective uncontrolled and controlled configurations.

I. INTRODUCTION

Over the past three decades, quantum communication techniques have advanced significantly. In this development, quantum teleportation [1–5], quantum key distribution [6–8], dense coding [9–11], remote state preparation [12–16], quantum secret sharing [17–20], and quantum dialogue protocols [21–23] played a major role. Essentially, all these protocols involve the transmission of quantum information using quantum principles such as superposition and entanglement. Preparing preshared entangled states between communicating parties is a crucial and challenging process in all quantum communication protocols.

Recently, entanglement generation using quantum walks has been proposed by many researchers and shown to be useful for quantum communication [24, 25]. A quantum walk is the quantum analogue of a classical random walk governed by quantum principles [26–28]. Quantum walk techniques have been experimentally realized in various systems such as trapped ions [29], photonic systems [30], and NMR systems [31], and it has been observed that they can generate quantum entanglement between the walker and the coin as well as between coins. Hence, quantum walk techniques have been employed in several quantum communication protocols, including quantum teleportation and remote state preparation.

Quantum teleportation is a protocol for transmitting an unknown quantum state from the first party to the second party [1], whereas in remote state preparation, the first party prepares

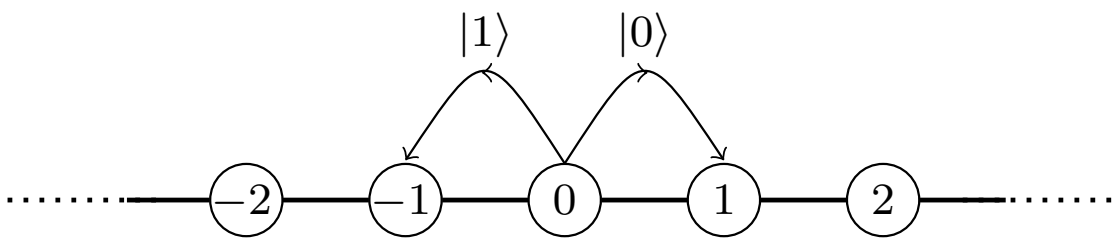

FIG. 1: The quantum walk on a one dimensional line. If the coin outcome is 0, the walker move towards right (from i to $i+1$). If the coin outcome is 1, the walker moves towards left (from i to $i-1$).

a known quantum state at the location of the second party. Remote state preparation was first introduced by Hoi-Kwong Lo [12], and subsequently many different protocols have been developed [13–16, 32]. Although many protocols for quantum teleportation using quantum walk techniques have been developed [33–39], this approach has not been extensively explored in the context of remote state preparation. Nevertheless, Choudhury et al. have proposed a unidirectional protocol for remote state preparation in the presence of a controller [40]. However, bidirectional remote state preparation protocols have not yet been explored. In this work, we develop a technique for bidirectional remote state preparation using quantum walks, both with and without a controller. We present the proposed protocol in detail and tabulate all possible measurements and their corresponding unitary transformations for bidirectional remote state preparation (BRSP).

This paper is organized as follows. In Sect. II, we introduce uncontrolled bidirectional remote state preparation. In this section, we analyze three cases: first, a walker on a line; second, a walker on a two-vertex complete graph; and third, a walker on a four-cycle. Sect. III presents controlled bidirectional remote state preparation. There also, we analyze three cases: first, a walker on a line; second, a walker on a two-vertex complete graph; and third, a walker on a four-cycle. Finally, we conclude in Sect. IV.

II. UNCONTROLLED BIDIRECTIONAL REMOTE STATE PREPARATION

In bidirectional remote state preparation (BRSP), Alice prepares a state known to her at Bob's location, and Bob simultaneously prepares a state known to him at Alice's location using quantum mechanical principles. For such a process to occur, the two communicating parties need to share an entangled state between them. In this BRSP protocol, we introduce a technique in which entanglement is generated within the protocol; this is achieved using quantum walks, specifically coined quantum walks.

In a coined quantum walk, there is a walker and a coin that exist in a combined Hilbert space $\mathcal{H} = \mathcal{H}_p \otimes \mathcal{H}_c$, where $\mathcal{H}_p$ is the Hilbert space of the walker on the lattice and $\mathcal{H}_c$ is the Hilbert space of the coin. In this process, the walker on the lattice moves one step to the right (from site i to $i+1$) when the coin outcome is 0, and moves one step to the left (from site i to $i-1$) when the coin outcome is 1, as shown in the FIG. 1. The movement of the walker is implemented by the

shift operators defined as follows:

$$\begin{aligned} S_0 &= \sum_i |i+1\rangle\langle i| \\ S_0^\dagger &= S_1 = \sum_i |i\rangle\langle i+1|, \end{aligned} \tag{1}$$

where S_0 and $S_0^\dagger = S_1$ are right shift and left shift operators respectively. During the walk, when the coin outcome is $|0\rangle$, the operator S_0 acts on the position space and the walker moves one step to the right, whereas when the coin outcome is $|1\rangle$, the operator S_1 acts on the position space and the walker moves one step to the left. The coin outcome, followed by the action of the conditional shift operator, executes the quantum walk process. In this section, we use the quantum walk process for uncontrolled bidirectional remote state preparation on a line, a two-vertex complete graph, and a 4-cycle.

A. Uncontrolled Bidirectional Remote State Preparation Using Quantum Walks on a Line

Now we discuss the simplest protocol of BRSP, namely BRSP without any controller. In this protocol, there are two parties, Alice and Bob, who are at different spatial locations, and each holds two coins. Alice wants to create a known state $|\phi_1\rangle = a_0|0\rangle + a_1|1\rangle$ at Bob's place and Bob wants to create a known state $|\phi_2\rangle = b_0|0\rangle + b_1|1\rangle$ at Alice's place. The coefficients a_0, a_1, b_0 and b_1 are real and satisfy the conditions $a_0^2 + a_1^2 = 1$ and $b_0^2 + b_1^2 = 1$ respectively. Also the state intended for creation is not initially in the physical possession of any of the parties.

The present communication task is implemented using quantum walks. For this purpose Alice has three particles: A_1, A_2 and A_3, where the first particle, A_1, is in Alice's position space $\mathcal{H}_{P_A}$, while the coin spaces $\mathcal{H}_{A_2}$ and $\mathcal{H}_{A_3}$ of particles A_2 and A_3, respectively, are the coin spaces held by Alice. Similarly, Bob possesses three particles B_1, B_2 and B_3; particle B_1 belongs to Bob's position space $\mathcal{H}_{P_B}$, while particle B_2 and B_3 reside in Bob's coin spaces $\mathcal{H}_{B_2}$ and $\mathcal{H}_{B_3}$, respectively.

The process of bidirectional remote state preparation involves four distinct walks, namely,

$$\begin{aligned} W_1 &= E_1(I_{A_1} \otimes I_{B_1} \otimes H_{A_2} \otimes I_{A_3} \otimes I_{B_2} \otimes I_{B_3}) \\ W_2 &= E_2(I_{A_1} \otimes I_{B_1} \otimes I_{A_2} \otimes I_{A_3} \otimes H_{B_2} \otimes I_{B_3}) \\ W_3 &= E_3(I_{A_1} \otimes I_{B_1} \otimes I_{A_2} \otimes H_{A_3} \otimes I_{B_2} \otimes I_{B_3}) \\ W_4 &= E_4(I_{A_1} \otimes I_{B_1} \otimes I_{A_2} \otimes I_{A_3} \otimes I_{B_2} \otimes H_{B_3}). \end{aligned} \tag{2}$$

In this case, the walker walks on the line according to the conditional shift operators defined in Eq. (1), driven by each of the four coins given as follows,

$$
\begin{aligned}
E_1 &= \sum_{i=0}^{1} (S_i \otimes I_{B_1} \otimes |i\rangle \langle i| \otimes I_{A_3} \otimes I_{B_2} \otimes I_{B_3}) \\
E_2 &= \sum_{i=0}^{1} (I_{A_1} \otimes S_i \otimes I_{A_2} \otimes I_{A_3} \otimes |i\rangle \langle i| \otimes I_{B_3}) \\
E_3 &= \sum_{i=0}^{1} (I_{A_1} \otimes S_i \otimes I_{A_2} \otimes |i\rangle \langle i| \otimes I_{B_2} \otimes I_{B_3}) \\
E_4 &= \sum_{i=0}^{1} (S_i \otimes I_{B_1} \otimes I_{A_2} \otimes I_{A_3} \otimes I_{B_2} \otimes |i\rangle \langle i|).
\end{aligned} \tag{3}
$$

Initially, the state of the entire system, consisting of A_1, A_2, A_3, B_1, B_2 and B_3, is given by,

$$
|\psi_0\rangle_{A_1B_1A_2A_3B_2B_3} = |00\rangle \otimes |0\rangle \otimes |0\rangle \otimes |0\rangle \otimes |0\rangle \,. \tag{4}
$$

After the first step, that is, after the execution of W_1, where H_{A_2} is the Hadamard operator acting on coin qubit A_2, the initial state given by Eq. (4) becomes,

$$
|\psi_1\rangle = \frac{1}{\sqrt{2}}(|100000\rangle + |-101000\rangle). \tag{5}
$$

Following the second step, that is, the execution of W_2, where H_{B_2} is the Hadamard operator acting on coin qubit B_2, the state in Eq. (5) becomes,

$$
|\psi_2\rangle = \frac{1}{2}(|110000\rangle + |1-10010\rangle + |-111000\rangle + |-1-11010\rangle). \tag{6}
$$

Upon completion of the third step, that is, the execution of W_3, where H_{A_3} denote the Hadamard operator acting on coin qubit A_3, the state in Eq. (6) becomes,

$$
\begin{aligned}
|\psi_3\rangle =& \frac{1}{2\sqrt{2}}(|120000\rangle + |100100\rangle + |100010\rangle + |1-20110\rangle + \\
& |-121000\rangle + |-101100\rangle + |-101010\rangle + |-1-21110\rangle).
\end{aligned} \tag{7}
$$

Finally, in the fourth step, that is, after the execution of W_4, where H_{B_3} is the Hadamard operator acting on coin qubit B_3, the state in Eq. (7) becomes,

$$
\begin{aligned}
|\psi_4\rangle =& \frac{1}{4}(|220000\rangle + |020001\rangle + |200100\rangle + |000101\rangle + \\
& |200010\rangle + |000011\rangle + |2-20110\rangle + |0-20111\rangle + \\
& |021000\rangle + |-221001\rangle + |001100\rangle + |-201101\rangle + \\
& |001010\rangle + |-201011\rangle + |0-21110\rangle + |-2-21111\rangle).
\end{aligned} \tag{8}
$$

To proceed further, first Alice and Bob perform measurements on the position spaces A_1 and B_1 in the bases,

$$
\begin{aligned}
M_{A_1B_1} =& \{|00\rangle \,, \frac{1}{\sqrt{2}}(|02\rangle + |0-2\rangle), \frac{1}{\sqrt{2}}(|02\rangle - |0-2\rangle), \frac{1}{\sqrt{2}}(|20\rangle + |-20\rangle), \frac{1}{\sqrt{2}}(|20\rangle - |-20\rangle), \\
& \frac{1}{2}(|22\rangle + |2-2\rangle + |-22\rangle + |-2-2\rangle), \frac{1}{2}(|22\rangle - |2-2\rangle + |-22\rangle - |-2-2\rangle), \\
& \frac{1}{2}(|22\rangle + |2-2\rangle - |-22\rangle - |-2-2\rangle), \frac{1}{2}(|22\rangle - |2-2\rangle - |-22\rangle + |-2-2\rangle)\}.
\end{aligned} \tag{9}
$$

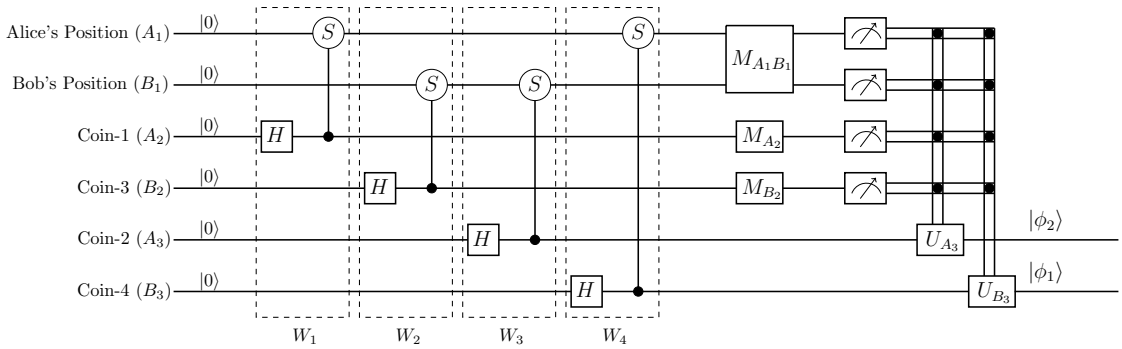

FIG. 2: Circuit diagram for uncontrolled bidirectional remote state preparation using quantum walks.

Subsequently, Alice and Bob perform measurements on the coin spaces A_2 and B_2 using the bases,

$$\begin{aligned} M_{A_2} =& \{|\beta_0\rangle = (a_0|0\rangle + a_1|1\rangle), |\beta_1\rangle = (a_1|0\rangle - a_0|1\rangle)\} \text{ and} \\ M_{B_2} =& \{|\gamma_0\rangle = (b_0|0\rangle + b_1|1\rangle), |\gamma_1\rangle = (b_1|0\rangle - b_0|1\rangle)\}, \end{aligned} \tag{10}$$

respectively.

Consider a simple case. Suppose Alice and Bob perform a measurement in the position basis $|00\rangle_{A_1B_1}$, then Eq. (8) becomes,

$$|\psi_5\rangle_{A_2A_3B_2B_3} = \frac{1}{4}(|0101\rangle + |0011\rangle + |1100\rangle + |1010\rangle). \tag{11}$$

Then, performing measurements on A_2 and B_2 in the $|\beta_0\rangle|\gamma_0\rangle$ basis yields,

$$|\psi_6\rangle_{A_3B_3} = (b_0|1\rangle + b_1|0\rangle)_{A_3}(a_0|1\rangle + a_1|0\rangle)_{B_3} \tag{12}$$

with a probability of $\frac{1}{16}$. Finally, to complete BRSP, Alice and Bob perform unitary operations $\sigma^x_{A_3}$ and $\sigma^x_{B_3}$ on the state given in Eq. (12), reducing it to the state,

$$|\psi_7\rangle_{A_3B_3} = (b_0|0\rangle + b_1|1\rangle)_{A_3}(a_0|0\rangle + a_1|1\rangle)_{B_3}. \tag{13}$$

Thus, Alice and Bob are able to achieve bidirectional remote state preparation between each other. The circuit diagram of the single-qubit BRSP protocol is shown in FIG.2. Additionally, all possible measurements and the corresponding unitary transformations for achieving bidirectional remote state preparation are given in Table I.

TABLE I: Measurements and the corresponding unitary transformations for achieving uncontrolled bidirectional remote state preparation using quantum walks on a line.

Position basis A_1 and B_1	Coin basis of A_2 and B_2	Unitary operations
$\|00\rangle_{A_1B_1}$	$\|\beta_0\rangle_{A_2}\|\gamma_0\rangle_{B_2}$	$\sigma^x_{A_3}\sigma^x_{B_3}$
	$\|\beta_0\rangle_{A_2}\|\gamma_1\rangle_{B_2}$	$\sigma^x_{A_3}\sigma^z_{A_3}\sigma^x_{A_3}\sigma^x_{B_3}$
	$\|\beta_1\rangle_{A_2}\|\gamma_0\rangle_{B_2}$	$\sigma^x_{A_3}\sigma^x_{B_3}\sigma^z_{B_3}\sigma^x_{B_3}$
	$\|\beta_1\rangle_{A_2}\|\gamma_1\rangle_{B_2}$	$\sigma^x_{A_3}\sigma^z_{A_3}\sigma^x_{A_3}\sigma^x_{B_3}\sigma^z_{B_3}\sigma^x_{B_3}$
$\frac{1}{\sqrt{2}}[\|02\rangle + \|0-2\rangle]_{A_1B_1}$	$\|\beta_0\rangle_{A_2}\|\gamma_0\rangle_{B_2}$	$\sigma^x_{B_3}$
	$\|\beta_0\rangle_{A_2}\|\gamma_1\rangle_{B_2}$	$\sigma^x_{A_3}\sigma^z_{A_3}\sigma^x_{B_3}$
	$\|\beta_1\rangle_{A_2}\|\gamma_0\rangle_{B_2}$	$\sigma^x_{B_3}\sigma^z_{B_3}\sigma^x_{B_3}$
	$\|\beta_1\rangle_{A_2}\|\gamma_1\rangle_{B_2}$	$\sigma^x_{A_3}\sigma^z_{A_3}\sigma^x_{B_3}\sigma^z_{B_3}\sigma^x_{B_3}$
$\frac{1}{\sqrt{2}}[\|02\rangle - \|0-2\rangle]$	$\|\beta_0\rangle_{A_2}\|\gamma_0\rangle_{B_2}$	$\sigma^z_{A_3}\sigma^x_{B_3}$
	$\|\beta_0\rangle_{A_2}\|\gamma_1\rangle_{B_2}$	$\sigma^x_{A_3}\sigma^x_{B_3}$
	$\|\beta_1\rangle_{A_2}\|\gamma_0\rangle_{B_2}$	$\sigma^z_{A_3}\sigma^x_{B_3}\sigma^z_{B_3}\sigma^x_{B_3}$
	$\|\beta_1\rangle_{A_2}\|\gamma_1\rangle_{B_2}$	$\sigma^x_{A_3}\sigma^x_{B_3}\sigma^z_{B_3}\sigma^x_{B_3}$
$\frac{1}{\sqrt{2}}[\|20\rangle + \|-20\rangle]_{A_1B_1}$	$\|\beta_0\rangle_{A_2}\|\gamma_0\rangle_{B_2}$	$\sigma^x_{A_3}$
	$\|\beta_0\rangle_{A_2}\|\gamma_1\rangle_{B_2}$	$\sigma^x_{A_3}\ \sigma^z_{A_3}\sigma^x_{A_3}$
	$\|\beta_1\rangle_{A_2}\|\gamma_0\rangle_{B_2}$	$\sigma^x_{A_3}\ \sigma^x_{B_3}\sigma^z_{B_3}$
	$\|\beta_1\rangle_{A_2}\|\gamma_1\rangle_{B_2}$	$\sigma^x_{A_3}\ \sigma^z_{A_3}\ \sigma^x_{A_3}\sigma^x_{B_3}\sigma^z_{B_3}$
$\frac{1}{\sqrt{2}}[\|20\rangle - \|-20\rangle]_{A_1B_1}$	$\|\beta_0\rangle_{A_2}\|\gamma_0\rangle_{B_2}$	$\sigma^x_{A_3}\ \sigma^z_{B_3}$
	$\|\beta_0\rangle_{A_2}\|\gamma_1\rangle_{B_2}$	$\sigma^x_{A_3}\ \sigma^z_{A_3}\sigma^x_{A_3}\sigma^z_{B_3}$
	$\|\beta_1\rangle_{A_2}\|\gamma_0\rangle_{B_2}$	$\sigma^x_{A_3}\ \sigma^x_{B_3}$
	$\|\beta_1\rangle_{A_2}\|\gamma_1\rangle_{B_2}$	$\sigma^x_{A_3}\ \sigma^z_{A_3}\sigma^x_{A_3}\sigma^x_{B_3}$
$\frac{1}{2}[\|22\rangle + \|2-2\rangle + \|-22\rangle + \|-2-2\rangle]_{A_1B_1}$	$\|\beta_0\rangle_{A_2}\|\gamma_0\rangle_{B_2}$	I
	$\|\beta_0\rangle_{A_2}\|\gamma_1\rangle_{B_2}$	$\sigma^x_{A_3}\ \sigma^z_{A_3}$
	$\|\beta_1\rangle_{A_2}\|\gamma_0\rangle_{B_2}$	$\sigma^x_{B_3}\ \sigma^z_{B_3}$
	$\|\beta_1\rangle_{A_2}\|\gamma_1\rangle_{B_2}$	$\sigma^x_{A_3}\ \sigma^z_{A_3}\sigma^x_{B_3}\sigma^z_{B_3}$
$\frac{1}{2}[\|22\rangle - \|2-2\rangle + \|-22\rangle - \|-2-2\rangle]_{A_1B_1}$	$\|\beta_0\rangle_{A_2}\|\gamma_0\rangle_{B_2}$	$\sigma^z_{A_3}$
	$\|\beta_0\rangle_{A_2}\|\gamma_1\rangle_{B_2}$	$\sigma^x_{A_3}$
	$\|\beta_1\rangle_{A_2}\|\gamma_0\rangle_{B_2}$	$\sigma^z_{A_3}\ \sigma^x_{B_3}\sigma^z_{B_3}$
	$\|\beta_1\rangle_{A_2}\|\gamma_1\rangle_{B_2}$	$\sigma^x_{A_3}\ \sigma^x_{B_3}\sigma^z_{B_3}$
$\frac{1}{2}[\|22\rangle + \|2-2\rangle - \|-22\rangle - \|-2-2\rangle]_{A_1B_1}$	$\|\beta_0\rangle_{A_2}\|\gamma_0\rangle_{B_2}$	$\sigma^z_{B_3}$
	$\|\beta_0\rangle_{A_2}\|\gamma_1\rangle_{B_2}$	$\sigma^x_{A_3}\ \sigma^z_{A_3}\sigma^z_{B_3}$
	$\|\beta_1\rangle_{A_2}\|\gamma_0\rangle_{B_2}$	$\sigma^x_{B_3}$
	$\|\beta_1\rangle_{A_2}\|\gamma_1\rangle_{B_2}$	$\sigma^x_{A_3}\sigma^z_{A_3}\sigma^x_{B_3}$
$\frac{1}{2}[\|22\rangle - \|2-2\rangle - \|-22\rangle + \|-2-2\rangle]_{A_1B_1}$	$\|\beta_0\rangle_{A_2}\|\gamma_0\rangle_{B_2}$	$\sigma^z_{A_3}\sigma^z_{B_3}$

$\|\beta_0\rangle_{A_2}\|\gamma_1\rangle_{B_2}$	$\sigma^x_{A_3}\ \sigma^z_{B_3}$
$\|\beta_1\rangle_{A_2}\|\gamma_0\rangle_{B_2}$	$\sigma^z_{A_3}\ \sigma^x_{B_3}$
$\|\beta_1\rangle_{A_2}\|\gamma_1\rangle_{B_2}$	$\sigma^x_{A_3}\ \sigma^x_{B_3}$

B. Uncontrolled Bidirectional Remote State Preparation Using Quantum Walks on a Two-Vertex Complete Graph

For BRSP of single qubit states, we can use quantum walks on a complete graph with two vertices introduced in the reference. For a two-vertex complete graph, there are two vertices, 0 and 1, with two directed edges as shown in FIG. 3. The coin outcome determines the direction of the edge: when the coin outcome is 0, the edge starts from a site and returns to itself, and when the coin outcome is 1, the edge starts from one site and goes to the other. This can be represented by the conditional shift operator defined as follows,

$$S = (|0\rangle\langle 0| + |1\rangle\langle 1|) \otimes |0\rangle\langle 0| + (|1\rangle\langle 0| + |0\rangle\langle 1|) \otimes |1\rangle\langle 1|\,. \tag{14}$$

In this conditional shift operator, the walker remains at the same vertex when the coin outcome is 0 and moves to the other vertex when the coin outcome is 1. One thing we must take care of while applying the conditional shift operator is identifying with respect to which coin the conditional shift operation is performed.

As in the previous section, Alice and Bob each have three particles: A_1, A_2, and A_3 for Alice, and B_1, B_2, and B_3 for Bob. Here, the first particles of Alice and Bob, A_1 and B_1, are each defined on independent two-vertex complete graphs. The remaining particles—A_2, and A_3 of Alice, and B_2, and B_3 of Bob—carry the respective coin states. As earlier, the initial state is given by,

$$|\psi_0\rangle_{A_1B_1A_2A_3B_2B_3} = |00\rangle \otimes |0\rangle \otimes |0\rangle \otimes |0\rangle \otimes |0\rangle\,. \tag{15}$$

In the first step of the quantum walk, W_1, Alice performs a Hadamard operation H_{A_2} on her first coin and then applies the shift operation on Alice's two-vertex graph, as defined in Eq. (14) with respect to Alice's coin A_2. Then. Eq. (15) becomes,

$$|\psi_1\rangle = \frac{1}{\sqrt{2}}(|000000\rangle + |101000\rangle). \tag{16}$$

After the second step, W_2, in which a Hadamard operation H_{B_2} is applied to Bob's coin B_2, followed by the shift operation (Eq.(14)) on Bob's two-vertex graph with respect to Bob's coin, B_2, Eq. (16) becomes,

$$|\psi_2\rangle = \frac{1}{2}(|000000\rangle + |010010\rangle + |101000\rangle + |111010\rangle). \tag{17}$$

Upon completion of the third step, W_3, in which a Hadamard operation H_{A_3} is applied to Alice's second coin A_3, followed by the shift operation on Bob's two-vertex graph, as defined in Eq. (14), with respect to Alice's second coin A_2, Eq. (17) becomes,

$$\begin{aligned}|\psi_3\rangle =& \frac{1}{2\sqrt{2}}(|000000\rangle + |010100\rangle + |010010\rangle + |000110\rangle + \\ & |101000\rangle + |111100\rangle + |111010\rangle + |101110\rangle).\end{aligned} \tag{18}$$

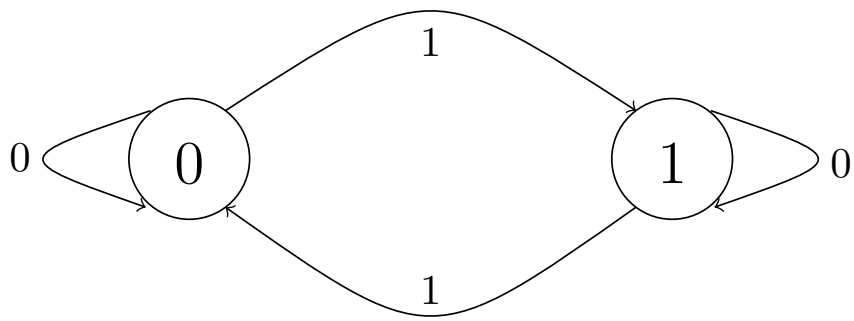

FIG. 3: Two vertex complete graph with one coin.

Finally, in the fourth walk, W_4, Bob performs a Hadamard operation H_{B_3} on his second coin B_3, followed by the shift operation (Eq. (14)) on Alice's two-vertex graph with respect to Bob's second coin B_3. Consequently, Eq. (18) becomes,

$$\begin{aligned}|\psi_4\rangle =&\frac{1}{4}(|000000\rangle + |100001\rangle + |010100\rangle + |110101\rangle + \\ &|010010\rangle + |110011\rangle + |000110\rangle + |100111\rangle + \\ &|101000\rangle + |001001\rangle + |111100\rangle + |011101\rangle + \\ &|111010\rangle + |011011\rangle + |101110\rangle + |001111\rangle).\end{aligned} \tag{19}$$

Alice and Bob now perform measurements on the position spaces A_1 and B_1 in the bases,

$$M_{A_1B_1} = \{|\alpha_0\rangle = |00\rangle\,,\ |\alpha_1\rangle = |01\rangle\,,\ |\alpha_2\rangle = |10\rangle\,,\ |\alpha_3\rangle = |11\rangle\}. \tag{20}$$

After that, Alice performs measurements on the coin space A_2 in the bases,

$$M_{A_2} = \{|\beta_0\rangle = (a_0\,|0\rangle + a_1\,|1\rangle),\ |\beta_1\rangle = (a_1\,|0\rangle - a_0\,|1\rangle\} \tag{21}$$

and Bob performs measurements on the coin space B_2 in the bases,

$$M_{B_2} = \{|\gamma_0\rangle = (b_0\,|0\rangle + b_1\,|1\rangle),\ |\gamma_1\rangle = (b_1\,|0\rangle - b_0\,|1\rangle)\}, \tag{22}$$

to achieve remote state preparation.

If the measurement result in both Alice's and Bob's position basis being $|00\rangle$, then state in Eq. (19) becomes,

$$|\psi_5\rangle_{A_2A_3B_2B_3} = \frac{1}{4}(|0000\rangle + |0110\rangle + |1001\rangle + |1111\rangle). \tag{23}$$

Finally, on performing measurements in the bases $|\beta_0\rangle\,|\gamma_0\rangle$ on A_2 and B_2, yields,

$$|\psi_7\rangle_{A_3B_3} = (b_0\,|0\rangle + b_1\,|1\rangle)_{A_3}(a_0\,|0\rangle + a_1\,|1\rangle)_{B_3}, \tag{24}$$

with a probability of $\frac{1}{16}$. Thus, for this particular set of bases for Alice and Bob, BRSP is achieved. All remaining possible measurements and the corresponding unitary transformations for achieving bidirectional remote state preparation are given in Table II.

TABLE II: Measurements and the corresponding unitary transformations for achieving uncontrolled bidirectional remote state preparation using quantum walks on a two-vertex complete graph.

Position basis A_1 and B_1	Coin basis A_2 and B_2	Unitary operations
$\|\alpha_0\rangle_{A_1B_1}$	$\|\beta_0\rangle_{A_2}\|\gamma_0\rangle_{B_2}$	I
	$\|\beta_0\rangle_{A_2}\|\gamma_1\rangle_{B_2}$	$\sigma^x_{A_3}\sigma^z_{A_3}$
	$\|\beta_1\rangle_{A_2}\|\gamma_0\rangle_{B_2}$	$\sigma^x_{B_3}\sigma^z_{B_3}$
	$\|\beta_1\rangle_{A_2}\|\gamma_1\rangle_{B_2}$	$\sigma^x_{A_3}\sigma^z_{A_3}\sigma^x_{B_3}\sigma^z_{B_3}$
$\|\alpha_1\rangle_{A_1B_1}$	$\|\beta_0\rangle_{A_2}\|\gamma_0\rangle_{B_2}$	$\sigma^x_{A_3}$
	$\|\beta_0\rangle_{A_2}\|\gamma_1\rangle_{B_2}$	$\sigma^x_{A_3}\sigma^z_{A_3}\sigma^x_{A_3}$
	$\|\beta_1\rangle_{A_2}\|\gamma_0\rangle_{B_2}$	$\sigma^x_{A_3}\sigma^x_{B_3}\sigma^z_{B_3}$
	$\|\beta_1\rangle_{A_2}\|\gamma_1\rangle_{B_2}$	$\sigma^x_{A_3}\sigma^z_{A_3}\sigma^x_{A_3}\sigma^x_{B_3}\sigma^z_{B_3}$
$\|\alpha_2\rangle_{A_1B_1}$	$\|\beta_0\rangle_{A_2}\|\gamma_0\rangle_{B_2}$	$\sigma^x_{B_3}$
	$\|\beta_0\rangle_{A_2}\|\gamma_1\rangle_{B_2}$	$\sigma^x_{A_3}\sigma^z_{A_3}\sigma^x_{B_3}$
	$\|\beta_1\rangle_{A_2}\|\gamma_0\rangle_{B_2}$	$\sigma^x_{B_3}\sigma^z_{B_3}\sigma^x_{B_3}$
	$\|\beta_1\rangle_{A_2}\|\gamma_1\rangle_{B_2}$	$\sigma^x_{A_3}\sigma^z_{A_3}\sigma^x_{B_3}\sigma^z_{B_3}\sigma^x_{B_3}$
$\|\alpha_3\rangle_{A_1B_1}$	$\|\beta_0\rangle_{A_2}\|\gamma_0\rangle_{B_2}$	$\sigma^x_{A_3}\sigma^x_{B_3}$
	$\|\beta_0\rangle_{A_2}\|\gamma_1\rangle_{B_2}$	$\sigma^x_{A_3}\sigma^z_{A_3}\sigma^x_{A_3}\sigma^x_{B_3}$
	$\|\beta_1\rangle_{A_2}\|\gamma_0\rangle_{B_2}$	$\sigma^x_{A_3}\sigma^x_{B_3}\sigma^z_{B_3}\sigma^x_{B_3}$
	$\|\beta_1\rangle_{A_2}\|\gamma_1\rangle_{B_2}$	$\sigma^x_{A_3}\sigma^z_{A_3}\sigma^x_{A_3}\sigma^x_{B_3}\sigma^z_{B_3}\sigma^x_{B_3}$

C. Uncontrolled Bidirectional Remote State Preparation Using Quantum Walks on 4-Cycle

In this BRSP scheme, the position spaces of Alice and Bob are two independent 4-cycle, with vertices labeled 0, 1, 2 and 3 in each, as shown in FIG. 4. As in the previous section, Alice has three particles: A_1, A_2 and A_3, where the state of A_1 represents Alice's position space (4-cycle), and the states of A_2 and A_3 are Alice's first and second coin spaces, respectively. Similarly, B_1 represents Bob's position space (4-cycle), and the states of B_2 and B_3 are Bob's first and second coin spaces, respectively. The conditional shift operator in the 4-cycle BRSP is defined as,

$$S = \sum_{i=0}^{2} |i+1\rangle\langle i| \otimes |0\rangle\langle 0| + \sum_{i=0}^{3} |i-1\rangle\langle i| \otimes |1\rangle\langle 1| + |0\rangle\langle 3| \otimes |0\rangle\langle 0| + |3\rangle\langle 0| \otimes |1\rangle\langle 1| . \tag{25}$$

This conditional shift is equivalent to the conditional shift operator defined in Eq. (1); however, in the present case only four vertices are involved, and their periodic connectivity (as shown in FIG 4), introduces periodicity into the conditional shift operator. Also, this conditional shift operates with respect to a specified coin, which must be mentioned during the walk.

Initially, the position spaces of A_1 and B_1 are initialized to $|0\rangle$, and the coin spaces of A_2,A_3,B_2 and B_3 are initialized to $|0\rangle$. Thus, the total initial state, in a convenient order is

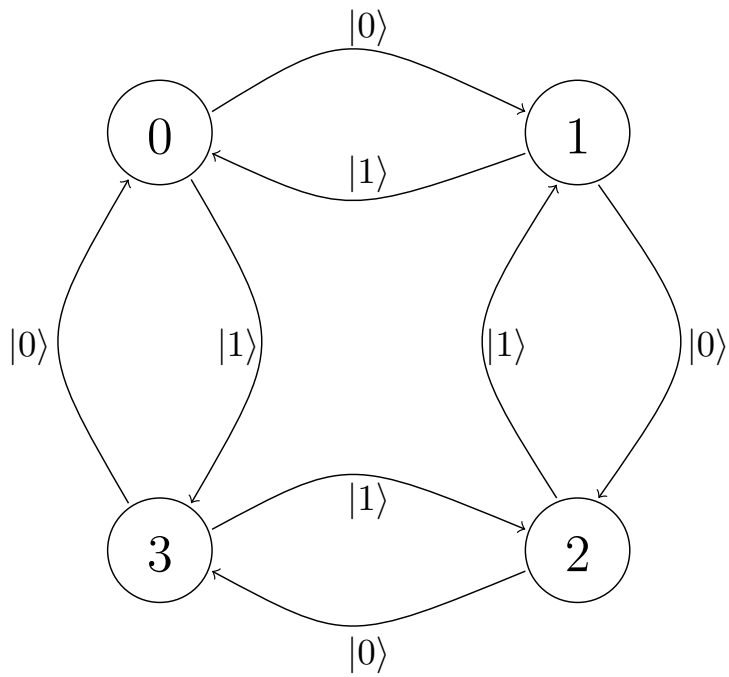

FIG. 4: A cycle with four vertices (4-cycle).

$$|\psi_0\rangle_{A_1B_1A_2A_3B_2B_3} = |00\rangle \otimes |0\rangle \otimes |0\rangle \otimes |0\rangle \otimes |0\rangle \,. \tag{26}$$

After the first step W_1, that is, after the execution of H_{A_2} followed by the conditional shift operation on the Alice's 4-cycle given in Eq. (25) with respect to Alice's first coin A_2, the above Eq. (26) becomes,

$$|\psi_1\rangle = \frac{1}{\sqrt{2}}(|100000\rangle + |301000\rangle). \tag{27}$$

Following the second step W_2, in which H_{B_2} is applied followed by the conditional shift operation on the Bob's 4-cycle given in Eq. (25) with respect to Bob's first coin B_2, the state in Eq. (27) becomes,

$$|\psi_2\rangle = \frac{1}{2}(|110000\rangle + |130010\rangle + |311000\rangle + |331010\rangle). \tag{28}$$

Then we proceed to the third step W_3, that is, after the execution of H_{A_3} followed by the conditional shift operation on the Bob's 4-cycle given in Eq. (25) with respect to Alice's second coin A_3, the state in Eq. (28) becomes,

$$\begin{aligned} |\psi_3\rangle = &\frac{1}{2\sqrt{2}}(|120000\rangle + |100100\rangle + |100010\rangle + |120110\rangle + \\ &|321000\rangle + |301100\rangle + |301010\rangle + |321110\rangle). \end{aligned} \tag{29}$$

Finally, in the fourth step W_4, Bob performs the operation H_{B_3} on his second coin, followed by the conditional shift operation on the Alice's 4-cycle given in Eq. (25) with respect to Bob's second

coin B_3, the state in Eq. (29) becomes,

$$\begin{aligned}|\psi_4\rangle =&\frac{1}{4}(|220000\rangle + |020001\rangle + |200100\rangle + |000101\rangle + \\ &|200010\rangle + |000011\rangle + |220110\rangle + |020111\rangle + \\ &|021000\rangle + |221001\rangle + |001100\rangle + |201101\rangle + \\ &|001010\rangle + |201011\rangle + |021110\rangle + |221111\rangle).\end{aligned} \tag{30}$$

Now Alice and Bob perform measurements on the position spaces A_1 and B_1 in the bases:

$$M_{A_1B_1} = \{(|\tilde{\alpha_0}\rangle = |22\rangle\,,\ |\tilde{\alpha_1}\rangle = |20\rangle\,,\ |\tilde{\alpha_2}\rangle = |02\rangle\,,\ |\tilde{\alpha_3}\rangle = |00\rangle)\}. \tag{31}$$

After that, Alice performs measurements on the coin space A_2 in the bases,

$$M_{A_2} = \{|\beta_0\rangle = (a_0\,|0\rangle + a_1\,|1\rangle),\ |\beta_1\rangle = (a_1\,|0\rangle - a_0\,|1\rangle)\} \tag{32}$$

and Bob performs measurements on the coin space B_2 in the bases,

$$M_{B_2} = \{|\gamma_0\rangle = (b_0\,|0\rangle + b_1\,|1\rangle),\ |\gamma_1\rangle = (b_1\,|0\rangle - b_0\,|1\rangle)\}, \tag{33}$$

to achieve BRSP.

If the measurement result in both Alice's and Bob's position basis being $|22\rangle$, then state in Eq. (30) becomes,

$$|\psi_5\rangle_{A_2A_3B_2B_3} = \frac{1}{4}(|0000\rangle + |0110\rangle + |1001\rangle + |1111\rangle). \tag{34}$$

Finally, on performing measurements in the bases $|\beta_0\rangle\,|\gamma_0\rangle$ on A_2 and B_2, yields,

$$|\psi_7\rangle_{A_3B_3} = (b_0\,|0\rangle + b_1\,|1\rangle)_{A_3}(a_0\,|0\rangle + a_1\,|1\rangle)_{B_3}, \tag{35}$$

with a probability of $\frac{1}{16}$. Thus, for this particular set of bases for Alice and Bob, BRSP is achieved. All remaining possible measurements and the corresponding unitary transformations for achieving bidirectional remote state preparation are equivalent to the two-vertex case given in Table II. More specifically, to obtain the exact table in this case, one only needs to replace the position basis $|\alpha_i\rangle$ introduced in Table II with $|\tilde{\alpha_i}\rangle$ defined in Eq. (31).

III. CONTROLLED BIDIRECTIONAL REMOTE STATE PREPARATION USING QUANTUM WALKS

In the preceding section, we analyzed the BRSP protocol without any controller. In this section, we analyze the BRSP protocol with the presence of a controller, Charlie. In this protocol, as in the previous section, Alice and Bob each hold three particles, A_1, A_2, A_3 and B_1, B_2, B_3, respectively, whose roles are the same as before. In addition, Charlie holds two particles, C_1 and C_2, which control the remote state preparation of the two parties. Unlike uncontrolled BRSP, Alice and Bob cannot remotely prepare a state without Charlie's permission. This increases the security of the protocol and makes it an authorized BRSP protocol. As in the previous section, here also we introduce a controlled BRSP protocol on a line, a two-vertex graph, and a 4-cycle.

A. Controlled Bidirectional Remote State Preparation Using Quantum Walks on a Line

In this section, we discuss the controlled BRSP of a single qubit using a controller on a line. The situation is such that there are two parties, Alice and Bob, located at different spatial positions and we have a controller, Charlie, who holds two coins for their actions. Alice wants to create a known state $|\phi_1\rangle = a_0 |0\rangle + a_1 |1\rangle$ at Bob's place, and Bob wants to create a known state $|\phi_2\rangle = b_0 |0\rangle + b_1 |1\rangle$ at Alice's place; this is the task of the protocol. In this case, the conditional shift operator is identical to the one defined in Eq. (1) in Sect. I.

Initially, the position spaces of A_1 and B_1 initialized to $|0\rangle$, and coin spaces of A_2,A_3,B_2,B_3, C_1 and C_2 are initialized to $|0\rangle$. Thus, the total initial state in the convenient order is,

$$|\psi_0\rangle_{A_1B_1A_2A_3B_2B_3C_1C_2} = |00\rangle \otimes |0\rangle \otimes |0\rangle \otimes |0\rangle \otimes |0\rangle \otimes |0\rangle \otimes |0\rangle \,. \tag{36}$$

The controlled BRSP protocol involves six distinct walks, which are described as follows:

$$\begin{aligned}
W_1 &= E_1(I_{A_1} \otimes I_{B_1} \otimes H_{A_2} \otimes I_{A_3} \otimes I_{B_2} \otimes I_{B_3} \otimes I_{C_1} \otimes I_{C_2}) \\
W_2 &= E_2(I_{A_1} \otimes I_{B_1} \otimes I_{A_2} \otimes I_{A_3} \otimes H_{B_2} \otimes I_{B_3} \otimes I_{C_1} \otimes I_{C_2}) \\
W_3 &= E_3(I_{A_1} \otimes I_{B_1} \otimes I_{A_2} \otimes H_{A_3} \otimes I_{B_2} \otimes I_{B_3} \otimes I_{C_1} \otimes I_{C_2}) \\
W_4 &= E_4(I_{A_1} \otimes I_{B_1} \otimes I_{A_2} \otimes I_{A_3} \otimes I_{B_2} \otimes H_{B_3} \otimes I_{C_1} \otimes I_{C_2}) \\
W_5 &= E_3(I_{A_1} \otimes I_{B_1} \otimes I_{A_2} \otimes I_{A_3} \otimes I_{B_2} \otimes I_{B_3} \otimes H_{C_1} \otimes I_{C_2}) \\
W_4 &= E_4(I_{A_1} \otimes I_{B_1} \otimes I_{A_2} \otimes I_{A_3} \otimes I_{B_2} \otimes I_{B_3} \otimes I_{C_1} \otimes H_{C_2}),
\end{aligned} \tag{37}$$

where,

$$\begin{aligned}
E_1 &= \sum_{i=0}^{1} (S_i \otimes I_{B_1} \otimes |i\rangle \langle i| \otimes I_{A_3} \otimes I_{B_2} \otimes I_{B_3} \otimes I_{C_1} \otimes I_{C_2}) \\
E_2 &= \sum_{i=0}^{1} (I_{A_1} \otimes S_i \otimes I_{A_2} \otimes I_{A_3} \otimes |i\rangle \langle i| \otimes I_{B_3} \otimes I_{C_1} \otimes I_{C_2}) \\
E_3 &= \sum_{i=0}^{1} (I_{A_1} \otimes S_i \otimes I_{A_2} \otimes |i\rangle \langle i| \otimes I_{B_2} \otimes I_{B_3} \otimes I_{C_1} \otimes I_{C_2}) \\
E_4 &= \sum_{i=0}^{1} (S_i \otimes I_{B_1} \otimes I_{A_2} \otimes I_{A_3} \otimes I_{B_2} \otimes |i\rangle \langle i| \otimes I_{C_1} \otimes I_{C_2}) \\
E_5 &= \sum_{i=0}^{1} (S_i \otimes I_{B_1} \otimes I_{A_2} \otimes I_{A_3} \otimes I_{B_2} \otimes I_{B_3} \otimes |i\rangle \langle i| \otimes I_{C_2}) \\
E_6 &= \sum_{i=0}^{1} (I_{A_1} \otimes S_i \otimes I_{A_2} \otimes I_{A_3} \otimes I_{B_2} \otimes I_{B_3} \otimes I_{C_1} \otimes |i\rangle \langle i|).
\end{aligned} \tag{38}$$

Now, we analyze the protocol in detail by first applying the initial step of the quantum walk, W_1, to Eq. (36) we get,

$$|\psi_1\rangle = \frac{1}{\sqrt{2}}(|10000000\rangle + |-10100000\rangle). \tag{39}$$

After applying the second step, W_2, we obtain the state,

$$|\psi_2\rangle = \frac{1}{2}(|11000000\rangle + |1-1001000\rangle + |-11100000\rangle + |-1-1101000\rangle). \tag{40}$$

Next, applying the third step of the quantum walk, W_3, transforms the above state into,

$$\begin{aligned}|\psi_3\rangle =& \frac{1}{2\sqrt{2}}(|12000000\rangle + |10010000\rangle + |10001000\rangle + |1-2011000\rangle \\ &+ |-12100000\rangle + |-10110000\rangle + |-10101000\rangle + |-1-2111000\rangle).\end{aligned} \tag{41}$$

Then, the action of W_4 yields,

$$\begin{aligned}|\psi_4\rangle =& \frac{1}{4}(|22000000\rangle + |02000100\rangle + |20010000\rangle + |00010100\rangle \\ &+ |20001000\rangle + |00001100\rangle + |2-2011000\rangle + |0-2011100\rangle \\ &+ |02100000\rangle + |-22100100\rangle + |00110000\rangle + |-20110100\rangle \\ &+ |-00101000\rangle + |-20101100\rangle + |0-2111000\rangle + |-2-2111100\rangle).\end{aligned} \tag{42}$$

Following this, the action of W_5 gives,

$$\begin{aligned}|\psi_5\rangle =& \frac{1}{4\sqrt{2}}(|32000000\rangle + |12000010\rangle + |12000100\rangle + |-12000110\rangle \\ &+ |30010000\rangle + |10010010\rangle + |10010100\rangle + |-10010110\rangle + \\ &+ |30001000\rangle + |10001010\rangle + |10001100\rangle + |-10001110\rangle + \\ &+ |3-2011000\rangle + |1-2011010\rangle + |1-2011100\rangle + |-1-2011110\rangle \\ &+ |12100000\rangle + |-12100010\rangle + |-12100100\rangle + |-32100110\rangle \\ &+ |10110000\rangle + |-10110010\rangle + |-10110100\rangle + |-30110110\rangle + \\ &+ |10101000\rangle + |-10101010\rangle + |-10101100\rangle + |-30101110\rangle \\ &+ |1-2111000\rangle + |-1-2111010\rangle + |-1-2111100\rangle + |-3-2111110\rangle).\end{aligned} \tag{43}$$

Finally, after applying W_6, we obtain the final state,

$$\begin{aligned}|\psi_6\rangle =&\frac{1}{8}(|33000000\rangle + |31000001\rangle + |13000010\rangle + |11000011\rangle \\ &+ |13000100\rangle + |11000101\rangle + |-13000110\rangle + |-11000111\rangle \\ &+ |31010000\rangle + |3-1010001\rangle + |11010010\rangle + |1-1010011\rangle \\ &+ |11010100\rangle + |1-1010101\rangle + |-11010110\rangle + |-1-1010111\rangle \\ &+ |31001000\rangle + |3-1001001\rangle + |11001010\rangle + |1-1001011\rangle \\ &+ |11001100\rangle + |1-1001101\rangle + |-11001110\rangle + |-1-1001111\rangle \\ &+ |3-1011000\rangle + |3-3011001\rangle + |1-1011010\rangle + |1-3011011\rangle \\ &+ |1-1011100\rangle + |1-3011101\rangle + |-1-1011110\rangle + |-1-3011111\rangle \\ &+ |13100000\rangle + |11100001\rangle + |-13100010\rangle + |-11100011\rangle \\ &+ |-13100100\rangle + |-11100101\rangle + |-33100110\rangle + |-31100111\rangle \\ &+ |11110000\rangle + |1-1110001\rangle + |-11110010\rangle + |-1-1110011\rangle \\ &+ |-11110100\rangle + |-1-1110101\rangle + |-31110110\rangle + |-3-1110111\rangle \\ &+ |11101000\rangle + |1-1101001\rangle + |-11101010\rangle + |-1-1101011\rangle \\ &+ |-11101100\rangle + |-1-1101101\rangle + |-31101110\rangle + |-3-1101111\rangle \\ &+ |1-1111000\rangle + |1-3111001\rangle + |-1-1111010\rangle + |-1-3111011\rangle \\ &+ |-1-1111100\rangle + |-1-3111101\rangle + |-3-1111110\rangle + |-3-3111111\rangle).\end{aligned} \tag{44}$$

To complete the protocol, we perform measurements on all position states and selected components of the coin states. If the measurement results in both Alice's and Bob's position bases being $\frac{1}{2}(|33\rangle + |3-1\rangle + |-13\rangle + |-1-1\rangle)$, then Eq. (44) becomes,

$$\begin{aligned}|\psi_7\rangle =&\frac{1}{16}(|000000\rangle + |000110\rangle + |010000\rangle + |010011\rangle \\ &+ |001001\rangle + |001111\rangle + |011000\rangle + |011110\rangle \\ &+ |100010\rangle + |100100\rangle + |110011\rangle + |110101\rangle \\ &+ |101011\rangle + |101101\rangle + |111010\rangle + |111100\rangle).\end{aligned} \tag{45}$$

As in the previous section, here also Alice (A_2) and Bob (B_2) can perform measurements on the following set of coin bases:

$$M_{A_2} = \{|\beta_0\rangle_{A_2} = (a_0\,|0\rangle + a_1\,|1\rangle),\ |\beta_1\rangle_{A_2} = (a_1\,|0\rangle - a_0\,|1\rangle)\} \tag{46}$$

and

$$M_{B_2} = \{|\gamma_0\rangle_{B_2} = (b_0\,|0\rangle + b_1\,|1\rangle),\ |\gamma_1\rangle_{B_2} = (b_1\,|0\rangle - b_0\,|1\rangle)\}. \tag{47}$$

Suppose, Alice and Bob perform measurements on coins A_2 and B_2, respectively, in the bases $|\beta_0\rangle\,|\gamma_0\rangle$; this yields,

$$
\begin{aligned}
|\psi_8\rangle =& a_0b_0\,|0000\rangle + a_0b_0\,|0110\rangle + a_0b_0\,|1000\rangle + a_0b_0\,|1011\rangle \\
&+ a_0b_1\,|0001\rangle + a_0b_1\,|0111\rangle + a_0b_1\,|1000\rangle + a_0b_1\,|1110\rangle \\
&+ a_1b_0\,|0010\rangle + a_1b_0\,|0100\rangle + a_1b_0\,|1011\rangle + a_1b_0\,|1101\rangle \\
&+ a_1b_1\,|0011\rangle + a_1b_1\,|0101\rangle + a_1b_1\,|1010\rangle + a_1b_1\,|1100\rangle\,.
\end{aligned} \tag{48}
$$

Finally, Charlie performs measurements on particles C_1 and C_2 in the $|00\rangle$ basis, yielding,

$$
|\psi_9\rangle = (b_0\,|0\rangle + b_1\,|1\rangle)_{A_3}(a_0\,|0\rangle + a_1\,|1\rangle)_{B_3} \tag{49}
$$

with a probability of $\frac{1}{256}$. That is, Alice is able to create a known state at Bob's location, and Bob is able to create a known state at Alice's location simultaneously. Here, the measurement outcomes of Charlie and the associated classical communication play a crucial role in the protocol; without the controller Charlie's permission, the protocol cannot be completed. Thus, the presence of a controller makes it an authorized protocol. Instead of measuring in the $|00\rangle$ basis, C_1 and C_2 can perform measurements in the $|01\rangle$, $|10\rangle$ and $|11\rangle$ bases. All these meausurements results are shown in Appendix 1. Table. III. In addition, Alice and Bob have to measure the remaining position bases to complete the protocol. The suitable position basis sets of Alice and Bob, A_1 and B_1, respectively, for the controlled BRSP protocol using quantum walks on a line are,

$$
\begin{aligned}
&M_{A_1B_1} = \\
&\{\,|\alpha_0\rangle = \frac{1}{2}(|33\rangle + |3-1\rangle + |-13\rangle + |-1-1\rangle), \quad |\alpha_1\rangle = \frac{1}{2}(|33\rangle - |3-1\rangle + |-13\rangle - |-1-1\rangle) \\
&|\alpha_2\rangle = \frac{1}{2}(|33\rangle + |3-1\rangle - |-13\rangle - |-1-1\rangle), \quad |\alpha_3\rangle = \frac{1}{2}(|33\rangle - |3-1\rangle - |-13\rangle + |-1-1\rangle) \\
&|\alpha_4\rangle = \frac{1}{2}(|31\rangle + |3-3\rangle + |-11\rangle + |-1-3\rangle), \quad |\alpha_5\rangle = \frac{1}{2}(|31\rangle - |3-3\rangle + |-11\rangle - |-1-3\rangle) \\
&|\alpha_6\rangle = \frac{1}{2}(|31\rangle + |3-3\rangle - |-11\rangle - |-1-3\rangle), \quad |\alpha_7\rangle = \frac{1}{2}(|31\rangle - |3-3\rangle - |-11\rangle + |-1-3\rangle) \\
&|\alpha_8\rangle = \frac{1}{2}(|13\rangle + |1-1\rangle + |-33\rangle + |-3-1\rangle), \quad |\alpha_9\rangle = \frac{1}{2}(|13\rangle - |1-1\rangle + |-33\rangle - |-3-1\rangle) \\
&|\alpha_{10}\rangle = \frac{1}{2}(|13\rangle + |1-1\rangle - |-33\rangle - |-3-1\rangle), \quad |\alpha_{11}\rangle = \frac{1}{2}(|13\rangle - |1-1\rangle - |-33\rangle + |-3-1\rangle) \\
&|\alpha_{12}\rangle = \frac{1}{2}(|11\rangle + |1-3\rangle + |-31\rangle + |-3-3\rangle), \quad |\alpha_{13}\rangle = \frac{1}{2}(|11\rangle - |1-3\rangle + |-31\rangle - |-3-3\rangle) \\
&|\alpha_{14}\rangle = \frac{1}{2}(|11\rangle + |1-3\rangle - |-31\rangle - |-3-3\rangle), \quad |\alpha_{15}\rangle = \frac{1}{2}(|11\rangle - |1-3\rangle - |-31\rangle + |-3-3\rangle)\}.
\end{aligned} \tag{50}
$$

Alice and Bob perform measurements in the above set of bases M_{A_1,B_1}, followed by measurements of the respective coin bases by Alice, Bob, and Charlie, as discussed earlier. The corresponding unitary operations that complete the protocol are shown in Appendix A, Table III. The circuit diagram of this controlled BRSP protocol is shown in FIG. 5.

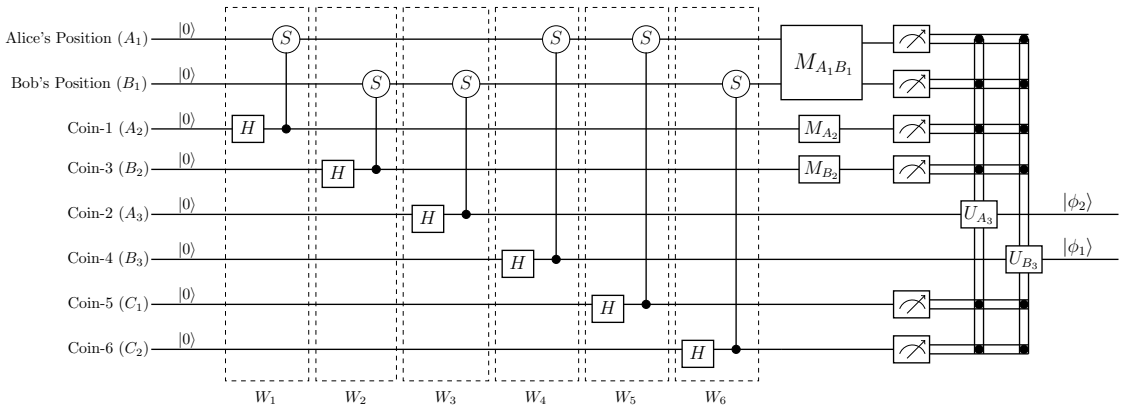

FIG. 5: Circuit diagram for controlled bidirectional remote state preparation using quantum walks.

B. Controlled Bidirectional Remote State Preparation Using Quantum Walks on a Two-Vertex Complete Graph

In this controlled BRSP scheme, the position spaces (as shown in FIG.3) and the coin spaces of Alice and Bob are the same as those in the two independent 2-vertex case discussed in the uncontrolled protocol. In this controlled protocol, in addition, there are two coin spaces C_1 and C_2 for the controller.

Initially, the position spaces A_1 and B_1 are initialized to $|0\rangle$, and the coin spaces A_2,A_3,B_2,B_3, C_1 and C_2 are initialized to $|0\rangle$. Thus, the total initial state, in a convenient order, is,

$$|\psi_0\rangle_{A_1B_1A_2A_3B_2B_3C_1C_2} = |00\rangle \otimes |0\rangle \otimes |0\rangle \otimes |0\rangle \otimes |0\rangle \otimes |0\rangle \otimes |0\rangle \,. \tag{51}$$

The conditional shift operator and the first four walks are the same as in the uncontrolled 2-vertex BRSP protocol, and in addition, there are two more walks controlled by Charlie. After the first step of the quantum walk, W_1, Eq. (51) becomes,

$$|\psi_1\rangle = \frac{1}{\sqrt{2}}(|10000000\rangle + |10100000\rangle). \tag{52}$$

Following this, upon applying the second step of quantum walk, W_2, we obtain the state,

$$|\psi_2\rangle = \frac{1}{2}(|00000000\rangle + |01001000\rangle + |10100000\rangle + |11101000\rangle). \tag{53}$$

Next, applying the third step of the quantum walk, W_3, transforms the above state to,

$$\begin{aligned} |\psi_3\rangle =& \frac{1}{2}(|00000000\rangle + |01010000\rangle + |01001000\rangle + |00011000\rangle \\ &+ |10100000\rangle + |11110000\rangle + |11101000\rangle + |10101000\rangle). \end{aligned} \tag{54}$$

Then, the action of W_4 yields,

$$
\begin{aligned}
|\psi_4\rangle =& \frac{1}{4}(|00000000\rangle + |10000100\rangle + |01010000\rangle + |11010100\rangle \\
&+ |01001000\rangle + |11001100\rangle + |00011000\rangle + |10011100\rangle \\
&+ |10100000\rangle + |00100100\rangle + |11110000\rangle + |01110100\rangle \\
&+ |11101000\rangle + |01101100\rangle + |10111000\rangle + |00111100\rangle).
\end{aligned} \tag{55}
$$

Following this, after the fifth step of the walk, W_5, in which a controlled shift operator acts on Alice's position with respect to Charlie's first coin C_1, the above state becomes,

$$
\begin{aligned}
|\psi_5\rangle =& \frac{1}{4\sqrt{2}}(|00000000\rangle + |10000010\rangle + |10000100\rangle + |00000110\rangle \\
&+ |00010000\rangle + |10010010\rangle + |10010100\rangle + |00010110\rangle + \\
&+ |00001000\rangle + |10001010\rangle + |10001100\rangle + |00001110\rangle + \\
&+ |01011000\rangle + |11011010\rangle + |11011100\rangle + |01011110\rangle \\
&+ |10100000\rangle + |01100010\rangle + |00100100\rangle + |10100110\rangle \\
&+ |10110000\rangle + |00110010\rangle + |00110100\rangle + |10110110\rangle + \\
&+ |10101000\rangle + |00101010\rangle + |00101100\rangle + |10101110\rangle \\
&+ |11111000\rangle + |01111010\rangle + |01111100\rangle + |11111110\rangle).
\end{aligned} \tag{56}
$$

Finally, in the sixth step, W_6, a controlled shift operator acts on Bob's position with respect to Charlie's second coin C_2, and the above state becomes,

$$
\begin{aligned}
|\psi_6\rangle =& \frac{1}{8}(|00000000\rangle + |01000001\rangle + |10000010\rangle + |11000011\rangle \\
&+ |10000100\rangle + |11000101\rangle + |00000110\rangle + |01000111\rangle \\
&+ |01010000\rangle + |00010001\rangle + |11010010\rangle + |10010011\rangle \\
&+ |11010100\rangle + |10010101\rangle + |01010110\rangle + |00010111\rangle \\
&+ |01001000\rangle + |00001001\rangle + |11001010\rangle + |10001011\rangle \\
&+ |11001100\rangle + |10001101\rangle + |01001110\rangle + |00001111\rangle \\
&+ |00011000\rangle + |01011001\rangle + |10011010\rangle + |11011011\rangle \\
&+ |10011100\rangle + |11011101\rangle + |00011110\rangle + |01011111\rangle \\
&+ |10100000\rangle + |11100001\rangle + |00100010\rangle + |01100011\rangle \\
&+ |00100100\rangle + |01100101\rangle + |10100110\rangle + |11100111\rangle \\
&+ |11110000\rangle + |10110001\rangle + |01110010\rangle + |00110011\rangle \\
&+ |01110100\rangle + |00110101\rangle + |11110110\rangle + |10110111\rangle \\
&+ |11101000\rangle + |10101001\rangle + |01101010\rangle + |00101011\rangle \\
&+ |01101100\rangle + |00101101\rangle + |11101110\rangle + |10101111\rangle \\
&+ |10111000\rangle + |11111001\rangle + |00111010\rangle + |01111011\rangle \\
&+ |00111100\rangle + |01111101\rangle + |10111110\rangle + |11111111\rangle).
\end{aligned} \tag{57}
$$

To obtain the remotely prepared state, we perform measurements over all position states and selected coin spaces. If the measurement outcomes for both Alice's and Bob's position bases are $|\alpha_0\rangle = |00\rangle$, then Eq. (57) becomes,

$$\begin{aligned}|\psi_7\rangle =& \frac{1}{8}(|000000\rangle + |000110\rangle + |010000\rangle + |010011\rangle \\ &+ |001001\rangle + |001111\rangle + |011000\rangle + |011110\rangle \\ &+ |100010\rangle + |100100\rangle + |110011\rangle + |110101\rangle \\ &+ |101011\rangle + |101101\rangle + |111010\rangle + |111100\rangle).\end{aligned} \tag{58}$$

Then, Alice and Bob (A_2 and B_2) perform measurements in the $|\beta_0\rangle\,|\gamma_0\rangle$ bases, as defined in Eqs. (46) and (47) yielding,

$$\begin{aligned}|\psi_8\rangle =& a_0b_0\,|0000\rangle + a_0b_0\,|0110\rangle + a_0b_0\,|1000\rangle + a_0b_0\,|1011\rangle \\ &+ a_0b_1\,|0001\rangle + a_0b_1\,|0111\rangle + a_0b_1\,|1000\rangle + a_0b_1\,|1110\rangle \\ &+ a_1b_0\,|0010\rangle + a_1b_0\,|0100\rangle + a_1b_0\,|1011\rangle + a_1b_0\,|1101\rangle \\ &+ a_1b_1\,|0011\rangle + a_1b_1\,|0101\rangle + a_1b_1\,|1010\rangle + a_1b_1\,|1100\rangle\,.\end{aligned} \tag{59}$$

Finally, Charlie performs measurements on particles C_1 and C_2 in the $|00\rangle$ basis, yielding,

$$|\psi_9\rangle = (b_0\,|0\rangle + b_1\,|1\rangle)_{A_3}(a_0\,|0\rangle + a_1\,|1\rangle)_{B_3} \tag{60}$$

with a probability of $\frac{1}{64}$. That is, Alice is able to create a known state for Bob, and Bob is able to create a known state for Alice simultaneously. Alice and Bob can perform measurements in all possible position bases ($|\alpha_1\rangle = |01\rangle$, $|\alpha_2\rangle = |10\rangle$, $|\alpha_3\rangle = |11\rangle$) and coin bases, followed by Charlie's measurement in the coin bases, which completes the protocol as shown Appendix B, Table IV.

C. Controlled Bidirectional Remote State Preparation Using Quantum Walks on 4-Cycle

In this controlled BRSP scheme, the position spaces of Alice and Bob are two independent 4-cycles, as shown in FIG. 4 of the previous section. In addition to the uncontrolled case, two more coin spaces, C_1 and C_2, are introduced by the controller. The conditional shift operator in this case is the same as that in Eqn. (25) of Sect. I.

Initially, the position spaces of A_1 and B_1 are initialized to $|0\rangle$, and the coin spaces of A_2,A_3,B_2,B_3, C_1andC_2 are initialized to $|0\rangle$. Hence, the total initial state, in a convenient order, is,

$$|\psi_0\rangle_{A_1B_1A_2A_3B_2B_3C_1C_2} = |00\rangle \otimes |0\rangle \otimes |0\rangle \otimes |0\rangle \otimes |0\rangle \otimes |0\rangle \otimes |0\rangle\,. \tag{61}$$

As in the previous section, we perform all six steps of the quantum walk. Now, we analyze the protocol in detail by first applying the initial step of the quantum walk, W_1, to Eq. (61),

$$|\psi_1\rangle = \frac{1}{\sqrt{2}}(|10000000\rangle + |30100000\rangle). \tag{62}$$

Then, applying the second step, W_2, we obtain the state,

$$|\psi_2\rangle = \frac{1}{2}(|11000000\rangle + |13001000\rangle + |31100000\rangle + |33101000\rangle). \tag{63}$$

Following the third step of the quantum walk, W_3, the above state is transformed to,

$$\begin{aligned}|\psi_3\rangle =&\frac{1}{2}(|12000000\rangle + |10010000\rangle + |10001000\rangle + |12011000\rangle \\ &+ |32100000\rangle + |30110000\rangle + |30101000\rangle + |32101000\rangle).\end{aligned} \tag{64}$$

Next, upon applying the fourth step, W_4, we obtain the state,

$$\begin{aligned}|\psi_4\rangle =&\frac{1}{4}(|22000000\rangle + |02000100\rangle + |20010000\rangle + |00010100\rangle \\ &+ |20001000\rangle + |00001100\rangle + |22011000\rangle + |02011100\rangle \\ &+ |02100000\rangle + |22100100\rangle + |00110000\rangle + |20110100\rangle \\ &+ |00101000\rangle + |20101100\rangle + |02111000\rangle + |22111100\rangle).\end{aligned} \tag{65}$$

After applying the fifth step, W_5, to the above state, we obtain,

$$\begin{aligned}|\psi_5\rangle =&\frac{1}{4\sqrt{2}}(|32000000\rangle + |12000010\rangle + |12000100\rangle + |32000110\rangle \\ &+ |30010000\rangle + |10010010\rangle + |10010100\rangle + |30010110\rangle + \\ &+ |30001000\rangle + |10001010\rangle + |10001100\rangle + |30001110\rangle + \\ &+ |32011000\rangle + |12011010\rangle + |12011100\rangle + |32011110\rangle \\ &+ |12100000\rangle + |32100010\rangle + |32100100\rangle + |12100110\rangle \\ &+ |10110000\rangle + |30110010\rangle + |30110100\rangle + |10110110\rangle + \\ &+ |10101000\rangle + |30101010\rangle + |30101100\rangle + |10101110\rangle \\ &+ |12111000\rangle + |32111010\rangle + |32111100\rangle + |12111110\rangle).\end{aligned} \tag{66}$$

Finally, upon applying W_6, the final state is obtained,

$$
\begin{aligned}
|\psi_6\rangle =& \frac{1}{8}(|33000000\rangle + |31000001\rangle + |13000010\rangle + |11000011\rangle \\
&+ |13000100\rangle + |11000101\rangle + |33000110\rangle + |31000111\rangle \\
&+ |31010000\rangle + |33010001\rangle + |11010010\rangle + |13010011\rangle \\
&+ |11010100\rangle + |13010101\rangle + |31010110\rangle + |33010111\rangle \\
&+ |31001000\rangle + |33001001\rangle + |11001010\rangle + |13001011\rangle \\
&+ |11001100\rangle + |13001101\rangle + |31001110\rangle + |33001111\rangle \\
&+ |33011000\rangle + |31011001\rangle + |13011010\rangle + |11011011\rangle \\
&+ |13011100\rangle + |11011101\rangle + |33011110\rangle + |31011111\rangle \\
&+ |13100000\rangle + |11100001\rangle + |33100010\rangle + |31100011\rangle \\
&+ |33100100\rangle + |31100101\rangle + |13100110\rangle + |11100111\rangle \\
&+ |11110000\rangle + |13110001\rangle + |31110010\rangle + |33110011\rangle \\
&+ |31110100\rangle + |33110101\rangle + |11110110\rangle + |13110111\rangle \\
&+ |11101000\rangle + |13101001\rangle + |31101010\rangle + |33101011\rangle \\
&+ |31101100\rangle + |33101101\rangle + |11101110\rangle + |13101111\rangle \\
&+ |13111000\rangle + |11111001\rangle + |33111010\rangle + |31111011\rangle \\
&+ |33111100\rangle + |31111101\rangle + |13111110\rangle + |11111111\rangle).
\end{aligned}
\tag{67}
$$

To obtain the remotely prepared state, we perform measurements over all position states and select the relevant components of the coin states. If the measurement outcome corresponds to both Alice's and Bob's position basis being $|\tilde{\alpha_0}\rangle = |33\rangle$, then Eq. (67) becomes,

$$
\begin{aligned}
|\psi_7\rangle =& \frac{1}{8}(|000000\rangle + |000110\rangle + |010000\rangle + |010011\rangle \\
&+ |001001\rangle + |001111\rangle + |011000\rangle + |011110\rangle \\
&+ |100010\rangle + |100100\rangle + |110011\rangle + |110101\rangle \\
&+ |101011\rangle + |101101\rangle + |111010\rangle + |111100\rangle).
\end{aligned}
\tag{68}
$$

Then, particles A_2 and B_2 are measured in the $|\beta_0\rangle\,|\gamma_0\rangle$ bases defined in Eqs. (46) and (47), yielding,

$$
\begin{aligned}
|\psi_8\rangle =& a_0b_0\,|0000\rangle + a_0b_0\,|0110\rangle + a_0b_0\,|1000\rangle + a_0b_0\,|1011\rangle \\
&+ a_0b_1\,|0001\rangle + a_0b_1\,|0111\rangle + a_0b_1\,|1000\rangle + a_0b_1\,|1110\rangle \\
&+ a_1b_0\,|0010\rangle + a_1b_0\,|0100\rangle + a_1b_0\,|1011\rangle + a_1b_0\,|1101\rangle \\
&+ a_1b_1\,|0011\rangle + a_1b_1\,|0101\rangle + a_1b_1\,|1010\rangle + a_1b_1\,|1100\rangle\,.
\end{aligned}
\tag{69}
$$

Finally, Charlie performs measurements on coins C_1 and C_2 in the $|00\rangle$ basis, yielding,

$$|\psi_9\rangle = (b_0 |0\rangle + b_1 |1\rangle)_{A_3}(a_0 |0\rangle + a_1 |1\rangle)_{B_3} \tag{70}$$

with a probability of $\frac{1}{64}$. That is, Alice is able to create a known state for Bob, and Bob is able to create a known state for Alice simultaneously. Instead of measuring the above-mentioned position basis, $|\tilde{\alpha_0}\rangle = |33\rangle$, Alice and Bob can measure the other position bases $|\tilde{\alpha_1}\rangle = |31\rangle$, $|\tilde{\alpha_2}\rangle = |13\rangle$ and $|\tilde{\alpha_3}\rangle = |11\rangle$ followed by measurements in all possible coin bases. The obtained results are equivalent to the controlled BRSP in the two-vertex case. The corresponding table for this case is analogous to Table. IV in Appendix B, with the position basis $|\alpha_i\rangle$ in the table replaced by $|\tilde{\alpha_i}\rangle$.

IV. CONCLUSION

We investigated bidirectional remote state preparation using quantum walks on two independent one-dimensional lattices, as well as on two independent cyclic graphs with two and four vertices. In this framework, nearest-neighbor transitions controlled by coin operations were used to achieve remote preparation of quantum states. The protocol was implemented in two scenarios: one without a controller and one with the involvement of a controller.

In this method, the entanglement required between the communicating parties is generated dynamically during the quantum walk evolution, eliminating the need for any pre-shared entangled resource. We analyzed the bidirectional remote state preparation process for both the uncontrolled and controlled cases on the considered graph structures. Finally, we showed that the quantum walk–based schemes on the two-vertex and four-cycle graphs display consistent behavior in both uncontrolled and controlled configurations.

Appendix A: Complete table for Controlled Bidirectional Remote State Preparation protocol

The controlled bidirectional remote state preparation protocol on a line is summarized in the following table.

TABLE III: Outcome of measurement performed by Alice and Bob in the first coin state and the unitary operation on their second coin state and measurement performed by Charlie in his two coin state for creating the known single qubit state.

Position basis	A_2, B_2 Coin basis	C_1, C_2 Coin basis	Unitary operation
$\|\alpha_0\rangle_{A_1B_1}$	$\|\beta_0\rangle_{A_2}\|\gamma_0\rangle_{B_2}$	$\|00\rangle$	I
		$\|01\rangle$	$\sigma^x_{A_3}$
		$\|10\rangle$	$\sigma^x_{B_3}$
		$\|11\rangle$	$\sigma^x_{A_3}\sigma^x_{B_3}$
	$\|\beta_0\rangle_{A_2}\|\gamma_1\rangle_{B_2}$	$\|00\rangle$	$\sigma^x_{A_3}\sigma^z_{A_3}$

		$\|01\rangle$	$\sigma^x_{A_3}\sigma^z_{A_3}\sigma^x_{A_3}$
		$\|10\rangle$	$\sigma^x_{A_3}\sigma^z_{A_3}\sigma^x_{B_3}$
		$\|11\rangle$	$\sigma^x_{A_3}\sigma^z_{A_3}\sigma^x_{A_3}\sigma^x_{B_3}$
	$\|\beta_1\rangle_{A_2}\|\gamma_0\rangle_{B_2}$	$\|00\rangle$	$\sigma^x_{B_3}\sigma^z_{B_3}$
		$\|01\rangle$	$\sigma^x_{A_3}\sigma^x_{B_3}\sigma^z_{B_3}$
		$\|10\rangle$	$\sigma^x_{B_3}\sigma^z_{B_3}\sigma^x_{B_3}$
		$\|11\rangle$	$\sigma^x_{A_3}\sigma^x_{B_3}\sigma^z_{B_3}\sigma^x_{B_3}$
	$\|\beta_1\rangle_{A_2}\|\gamma_1\rangle_{B_2}$	$\|00\rangle$	$\sigma^x_{A_3}\sigma^z_{A_3}\sigma^x_{B_3}\sigma^z_{B_3}$
		$\|01\rangle$	$\sigma^x_{A_3}\sigma^z_{A_3}\sigma^x_{A_3}\sigma^x_{B_3}\sigma^z_{B_3}$
		$\|10\rangle$	$\sigma^x_{A_3}\sigma^z_{A_3}\sigma^x_{B_3}\sigma^z_{B_3}\sigma^x_{B_3}$
		$\|11\rangle$	$\sigma^x_{A_3}\sigma^z_{A_3}\sigma^x_{A_3}\sigma^x_{B_3}\sigma^z_{B_3}\sigma^x_{B_3}$
$\|\alpha_1\rangle_{A_1B_1}$	$\|\beta_0\rangle_{A_2}\|\gamma_0\rangle_{B_2}$	$\|00\rangle$	$\sigma^z_{A_3}$
		$\|01\rangle$	$\sigma^z_{A_3}\sigma^x_{A_3}\sigma^z_{A_3}$
		$\|10\rangle$	$\sigma^z_{A_3}\sigma^x_{B_3}$
		$\|11\rangle$	$\sigma^z_{A_3}\sigma^x_{A_3}\sigma^z_{A_3}\sigma^x_{B_3}$
	$\|\beta_0\rangle_{A_2}\|\gamma_1\rangle_{B_2}$	$\|00\rangle$	$\sigma^x_{A_3}$
		$\|01\rangle$	$\sigma^z_{A_3}$
		$\|10\rangle$	$\sigma^x_{A_3}\sigma^x_{B_3}$
		$\|11\rangle$	$\sigma^z_{A_3}\sigma^x_{B_3}$
	$\|\beta_1\rangle_{A_2}\|\gamma_0\rangle_{B_2}$	$\|00\rangle$	$\sigma^x_{A_3}\sigma^z_{A_3}\sigma^x_{A_3}\sigma^z_{B_3}\sigma^x_{B_3}$
		$\|01\rangle$	$\sigma^x_{A_3}\sigma^z_{B_3}\sigma^x_{B_3}$
		$\|10\rangle$	$\sigma^x_{A_3}\sigma^z_{A_3}\sigma^x_{A_3}\sigma^z_{B_3}$
		$\|11\rangle$	$\sigma^x_{A_3}\sigma^z_{B_3}$
	$\|\beta_1\rangle_{A_2}\|\gamma_1\rangle_{B_2}$	$\|00\rangle$	$\sigma^x_{A_3}\sigma^x_{B_3}\sigma^z_{B_3}$
		$\|01\rangle$	$\sigma^z_{A_3}\sigma^x_{B_3}\sigma^z_{B_3}$
		$\|10\rangle$	$\sigma^x_{A_3}\sigma^x_{B_3}\sigma^z_{B_3}\sigma^x_{B_3}$
		$\|11\rangle$	$\sigma^z_{A_3}\sigma^x_{B_3}\sigma^z_{B_3}\sigma^x_{B_3}$
$\|\alpha_2\rangle_{A_1B_1}$	$\|\beta_0\rangle_{A_2}\|\gamma_0\rangle_{B_2}$	$\|00\rangle$	$\sigma^z_{B_3}$
		$\|01\rangle$	$\sigma^x_{A_3}\sigma^z_{B_3}$
		$\|10\rangle$	$\sigma^z_{B_3}\sigma^x_{B_3}\sigma^z_{B_3}$
		$\|11\rangle$	$\sigma^x_{A_3}\sigma^z_{B_3}\sigma^x_{B_3}\sigma^z_{B_3}$
	$\|\beta_0\rangle_{A_2}\|\gamma_1\rangle_{B_2}$	$\|00\rangle$	$\sigma^z_{A_3}\sigma^x_{A_3}\sigma^x_{B_3}\sigma^z_{B_3}$
		$\|01\rangle$	$\sigma^z_{A_3}\sigma^x_{B_3}\sigma^z_{B_3}$
		$\|10\rangle$	$\sigma^z_{A_3}\sigma^x_{A_3}\sigma^x_{B_3}$
		$\|11\rangle$	$\sigma^z_{A_3}\sigma^x_{B_3}$
	$\|\beta_1\rangle_{A_2}\|\gamma_0\rangle_{B_2}$	$\|00\rangle$	$\sigma^x_{B_3}$

		$\|01\rangle$	$\sigma^x_{A_3}\sigma^x_{B_3}$
		$\|10\rangle$	$\sigma^z_{B_3}$
		$\|11\rangle$	$\sigma^x_{A_3}\sigma^z_{B_3}$
	$\|\beta_1\rangle_{A_2}\|\gamma_1\rangle_{B_2}$	$\|00\rangle$	$\sigma^x_{A_3}\sigma^z_{A_3}\sigma^x_{B_3}$
		$\|01\rangle$	$\sigma^x_{A_3}\sigma^z_{A_3}\sigma^x_{A_3}\sigma^x_{B_3}$
		$\|10\rangle$	$\sigma^x_{A_3}\sigma^z_{A_3}\sigma^z_{B_3}$
		$\|11\rangle$	$\sigma^x_{A_3}\sigma^z_{A_3}\sigma^x_{A_3}\sigma^z_{B_3}$
$\|\alpha_3\rangle_{A_1B_1}$	$\|\beta_0\rangle_{A_2}\|\gamma_0\rangle_{B_2}$	$\|00\rangle$	$\sigma^x_{A_3}\sigma^z_{A_3}\sigma^x_{A_3}\sigma^x_{B_3}\sigma^z_{B_3}\sigma^x_{B_3}$
		$\|01\rangle$	$\sigma^x_{A_3}\sigma^x_{B_3}\sigma^z_{B_3}\sigma^x_{B_3}$
		$\|10\rangle$	$\sigma^x_{A_3}\sigma^z_{A_3}\sigma^x_{A_3}\sigma^x_{B_3}$
		$\|11\rangle$	$\sigma^x_{A_3}\sigma^x_{B_3}$
	$\|\beta_0\rangle_{A_2}\|\gamma_1\rangle_{B_2}$	$\|00\rangle$	$\sigma^x_{A_3}\sigma^z_{B_3}$
		$\|01\rangle$	$\sigma^z_{A_3}\sigma^z_{B_3}$
		$\|10\rangle$	$\sigma^x_{A_3}\sigma^z_{B_3}\sigma^x_{B_3}\sigma^z_{B_3}$
		$\|11\rangle$	$\sigma^z_{A_3}\sigma^z_{B_3}\sigma^x_{B_3}\sigma^z_{B_3}$
	$\|\beta_1\rangle_{A_2}\|\gamma_0\rangle_{B_2}$	$\|00\rangle$	$\sigma^z_{A_3}\sigma^x_{B_3}$
		$\|01\rangle$	$\sigma^z_{A_3}\sigma^x_{A_3}\sigma^z_{A_3}\sigma^x_{B_3}$
		$\|10\rangle$	$\sigma^z_{A_3}\sigma^z_{B_3}$
		$\|11\rangle$	$\sigma^z_{A_3}\sigma^x_{A_3}\sigma^z_{A_3}\sigma^z_{B_3}$
	$\|\beta_1\rangle_{A_2}\|\gamma_1\rangle_{B_2}$	$\|00\rangle$	$\sigma^x_{A_3}\sigma^x_{B_3}$
		$\|01\rangle$	$\sigma^z_{A_3}\sigma^x_{B_3}$
		$\|10\rangle$	$\sigma^x_{A_3}\sigma^z_{B_3}$
		$\|11\rangle$	$\sigma^z_{A_3}\sigma^z_{B_3}$
$\|\alpha_4\rangle_{A_1B_1}$	$\|\beta_0\rangle_{A_2}\|\gamma_0\rangle_{B_2}$	$\|00\rangle$	$\sigma^x_{A_3}$
		$\|01\rangle$	I
		$\|10\rangle$	$\sigma^x_{A_3}\sigma^x_{B_3}$
		$\|11\rangle$	$\sigma^x_{B_3}$
	$\|\beta_0\rangle_{A_2}\|\gamma_1\rangle_{B_2}$	$\|00\rangle$	$\sigma^x_{A_3}\sigma^z_{A_3}\sigma^x_{A_3}$
		$\|01\rangle$	$\sigma^x_{A_3}\sigma^z_{A_3}$
		$\|10\rangle$	$\sigma^x_{A_3}\sigma^z_{A_3}\sigma^x_{A_3}\sigma^x_{B_3}$
		$\|11\rangle$	$\sigma^x_{A_3}\sigma^z_{A_3}\sigma^x_{B_3}$
	$\|\beta_1\rangle_{A_2}\|\gamma_0\rangle_{B_2}$	$\|00\rangle$	$\sigma^x_{A_3}\sigma^x_{B_3}\sigma^z_{B_3}$
		$\|01\rangle$	$\sigma^x_{B_3}\sigma^z_{B_3}$
		$\|10\rangle$	$\sigma^x_{A_3}\sigma^x_{B_3}\sigma^z_{B_3}\sigma^x_{B_3}$
		$\|11\rangle$	$\sigma^x_{B_3}\sigma^z_{B_3}\sigma^x_{B_3}$
	$\|\beta_1\rangle_{A_2}\|\gamma_1\rangle_{B_2}$	$\|00\rangle$	$\sigma^x_{A_3}\sigma^z_{A_3}\sigma^x_{A_3}\sigma^x_{B_3}\sigma^z_{B_3}$
		$\|01\rangle$	$\sigma^x_{A_3}\sigma^z_{A_3}\sigma^x_{B_3}\sigma^z_{B_3}$

		$\|10\rangle$	$\sigma^x_{A_3}\sigma^z_{A_3}\sigma^x_{A_3}\sigma^x_{B_3}\sigma^z_{B_3}\sigma^x_{B_3}$
		$\|11\rangle$	$\sigma^x_{A_3}\sigma^z_{A_3}\sigma^x_{B_3}\sigma^z_{B_3}\sigma^x_{B_3}$
$\|\alpha_5\rangle_{A_1B_1}$	$\|\beta_0\rangle_{A_2}\|\gamma_0\rangle_{B_2}$	$\|00\rangle$	$\sigma^x_{A_3}$
		$\|01\rangle$	$\sigma^z_{A_3}$
		$\|10\rangle$	$\sigma^x_{A_3}\sigma^x_{B_3}$
		$\|11\rangle$	$\sigma^z_{A_3}\sigma^x_{B_3}$
	$\|\beta_0\rangle_{A_2}\|\gamma_1\rangle_{B_2}$	$\|00\rangle$	$\sigma^x_{A_3}\sigma^z_{A_3}\sigma^x_{A_3}$
		$\|01\rangle$	$\sigma^x_{A_3}$
		$\|10\rangle$	$\sigma^x_{A_3}\sigma^z_{A_3}\sigma^x_{A_3}\sigma^x_{B_3}$
		$\|11\rangle$	$\sigma^x_{A_3}\sigma^x_{B_3}$
	$\|\beta_1\rangle_{A_2}\|\gamma_0\rangle_{B_2}$	$\|00\rangle$	$\sigma^x_{A_3}\sigma^x_{B_3}\sigma^z_{B_3}$
		$\|01\rangle$	$\sigma^z_{A_3}\sigma^x_{B_3}\sigma^z_{B_3}$
		$\|10\rangle$	$\sigma^x_{A_3}\sigma^x_{B_3}\sigma^z_{B_3}\sigma^x_{B_3}$
		$\|11\rangle$	$\sigma^z_{A_3}\sigma^x_{B_3}\sigma^z_{B_3}\sigma^x_{B_3}$
	$\|\beta_1\rangle_{A_2}\|\gamma_1\rangle_{B_2}$	$\|00\rangle$	$\sigma^x_{A_3}\sigma^z_{A_3}\sigma^x_{A_3}\sigma^x_{B_3}\sigma^z_{B_3}$
		$\|01\rangle$	$\sigma^x_{A_3}\sigma^x_{B_3}\sigma^z_{B_3}$
		$\|10\rangle$	$\sigma^x_{A_3}\sigma^z_{A_3}\sigma^x_{A_3}\sigma^x_{B_3}\sigma^z_{B_3}\sigma^x_{B_3}$
		$\|11\rangle$	$\sigma^x_{A_3}\sigma^x_{B_3}\sigma^z_{B_3}\sigma^x_{B_3}$
$\|\alpha_6\rangle_{A_1B_1}$	$\|\beta_0\rangle_{A_2}\|\gamma_0\rangle_{B_2}$	$\|00\rangle$	$\sigma^x_{A_3}\sigma^z_{B_3}$
		$\|01\rangle$	$\sigma^z_{B_3}$
		$\|10\rangle$	$\sigma^x_{A_3}\sigma^z_{B_3}\sigma^x_{B_3}\sigma^z_{B_3}$
		$\|11\rangle$	$\sigma^z_{B_3}\sigma^x_{B_3}\sigma^z_{B_3}$
	$\|\beta_0\rangle_{A_2}\|\gamma_1\rangle_{B_2}$	$\|00\rangle$	$\sigma^z_{A_3}\sigma^x_{B_3}\sigma^z_{B_3}\sigma^x_{B_3}$
		$\|01\rangle$	$\sigma^z_{A_3}\sigma^x_{A_3}\sigma^x_{B_3}\sigma^z_{B_3}\sigma^x_{B_3}$
		$\|10\rangle$	$\sigma^z_{A_3}\sigma^x_{B_3}$
		$\|11\rangle$	$\sigma^z_{A_3}\sigma^x_{A_3}\sigma^x_{B_3}$
	$\|\beta_1\rangle_{A_2}\|\gamma_0\rangle_{B_2}$	$\|00\rangle$	$\sigma^x_{A_3}\sigma^x_{B_3}$
		$\|01\rangle$	$\sigma^x_{B_3}$
		$\|10\rangle$	$\sigma^x_{A_3}\sigma^z_{B_3}$
		$\|11\rangle$	$\sigma^z_{B_3}$
	$\|\beta_1\rangle_{A_2}\|\gamma_1\rangle_{B_2}$	$\|00\rangle$	$\sigma^x_{A_3}\sigma^z_{A_3}\sigma^x_{A_3}\sigma^x_{B_3}$
		$\|01\rangle$	$\sigma^x_{A_3}\sigma^z_{A_3}\sigma^x_{B_3}$
		$\|10\rangle$	$\sigma^x_{A_3}\sigma^z_{A_3}\sigma^x_{A_3}\sigma^z_{B_3}$
		$\|11\rangle$	$\sigma^x_{A_3}\sigma^z_{A_3}\sigma^z_{B_3}$
$\|\alpha_7\rangle_{A_1B_1}$	$\|\beta_0\rangle_{A_2}\|\gamma_0\rangle_{B_2}$	$\|00\rangle$	$\sigma^x_{A_3}\sigma^z_{B_3}$
		$\|01\rangle$	$\sigma^z_{A_3}\sigma^z_{B_3}$

		$\|10\rangle$	$\sigma^x_{A_3}\sigma^z_{B_3}\sigma^x_{B_3}\sigma^z_{B_3}$
		$\|11\rangle$	$\sigma^z_{A_3}\sigma^z_{B_3}\sigma^x_{B_3}\sigma^z_{B_3}$
	$\|\beta_0\rangle_{A_2}\|\gamma_1\rangle_{B_2}$	$\|00\rangle$	$\sigma^z_{A_3}\sigma^x_{A_3}\sigma^z_{B_3}$
		$\|01\rangle$	$\sigma^x_{A_3}\sigma^z_{B_3}$
		$\|10\rangle$	$\sigma^z_{A_3}\sigma^x_{A_3}\sigma^z_{B_3}\sigma^x_{B_3}\sigma^z_{B_3}$
		$\|11\rangle$	$\sigma^x_{A_3}\sigma^z_{B_3}\sigma^x_{B_3}\sigma^z_{B_3}$
	$\|\beta_1\rangle_{A_2}\|\gamma_0\rangle_{B_2}$	$\|00\rangle$	$\sigma^x_{A_3}\sigma^x_{B_3}$
		$\|01\rangle$	$\sigma^z_{A_3}\sigma^x_{B_3}$
		$\|10\rangle$	$\sigma^x_{A_3}\sigma^z_{B_3}$
		$\|11\rangle$	$\sigma^z_{A_3}\sigma^z_{B_3}$
	$\|\beta_1\rangle_{A_2}\|\gamma_1\rangle_{B_2}$	$\|00\rangle$	$\sigma^x_{A_3}\sigma^z_{A_3}\sigma^x_{A_3}\sigma^x_{B_3}$
		$\|01\rangle$	$\sigma^x_{A_3}\sigma^z_{B_3}$
		$\|10\rangle$	$\sigma^x_{A_3}\sigma^z_{A_3}\sigma^x_{A_3}\sigma^z_{B_3}$
		$\|11\rangle$	$\sigma^x_{A_3}\sigma^z_{B_3}$
$\|\alpha_8\rangle_{A_1B_1}$	$\|\beta_0\rangle_{A_2}\|\gamma_0\rangle_{B_2}$	$\|00\rangle$	$\sigma^x_{B_3}$
		$\|01\rangle$	$\sigma^x_{A_3}\sigma^x_{B_3}$
		$\|10\rangle$	I
		$\|11\rangle$	$\sigma^x_{A_3}$
	$\|\beta_0\rangle_{A_2}\|\gamma_1\rangle_{B_2}$	$\|00\rangle$	$\sigma^x_{A_3}\sigma^z_{A_3}\sigma^x_{B_3}$
		$\|01\rangle$	$\sigma^x_{A_3}\sigma^z_{A_3}\sigma^x_{A_3}\sigma^x_{B_3}$
		$\|10\rangle$	$\sigma^x_{A_3}\sigma^z_{A_3}$
		$\|11\rangle$	$\sigma^x_{A_3}\sigma^z_{A_3}\sigma^x_{A_3}$
	$\|\beta_1\rangle_{A_2}\|\gamma_0\rangle_{B_2}$	$\|00\rangle$	$\sigma^x_{B_3}\sigma^z_{B_3}\sigma^x_{B_3}$
		$\|01\rangle$	$\sigma^x_{A_3}\sigma^x_{B_3}\sigma^z_{B_3}\sigma^x_{B_3}$
		$\|10\rangle$	$\sigma^x_{B_3}\sigma^z_{B_3}$
		$\|11\rangle$	$\sigma^x_{A_3}\sigma^x_{B_3}\sigma^z_{B_3}$
	$\|\beta_1\rangle_{A_2}\|\gamma_1\rangle_{B_2}$	$\|00\rangle$	$\sigma^x_{A_3}\sigma^z_{A_3}\sigma^x_{B_3}\sigma^z_{B_3}\sigma^x_{B_3}$
		$\|01\rangle$	$\sigma^x_{A_3}\sigma^z_{A_3}\sigma^x_{A_3}\sigma^x_{B_3}\sigma^z_{B_3}\sigma^x_{B_3}$
		$\|10\rangle$	$\sigma^x_{A_3}\sigma^z_{A_3}\sigma^x_{B_3}\sigma^z_{B_3}$
		$\|11\rangle$	$\sigma^x_{A_3}\sigma^z_{A_3}\sigma^x_{A_3}\sigma^x_{B_3}\sigma^z_{B_3}$
$\|\alpha_9\rangle_{A_1B_1}$	$\|\beta_0\rangle_{A_2}\|\gamma_0\rangle_{B_2}$	$\|00\rangle$	$\sigma^z_{A_3}\sigma^x_{B_3}$
		$\|01\rangle$	$\sigma^z_{A_3}\sigma^x_{A_3}\sigma^z_{A_3}\sigma^x_{B_3}$
		$\|10\rangle$	$\sigma^z_{A_3}$
		$\|11\rangle$	$\sigma^z_{A_3}\sigma^x_{A_3}\sigma^z_{A_3}$
	$\|\beta_0\rangle_{A_2}\|\gamma_1\rangle_{B_2}$	$\|00\rangle$	$\sigma^x_{A_3}\sigma^x_{B_3}$
		$\|01\rangle$	$\sigma^z_{A_3}\sigma^x_{B_3}$

		$\|10\rangle$	$\sigma^x_{A_3}$
		$\|11\rangle$	$\sigma^z_{A_3}$
	$\|\beta_1\rangle_{A_2}\|\gamma_0\rangle_{B_2}$	$\|00\rangle$	$\sigma^x_{A_3}\sigma^z_{A_3}\sigma^x_{A_3}\sigma^z_{B_3}$
		$\|01\rangle$	$\sigma^x_{A_3}\sigma^z_{B_3}$
		$\|10\rangle$	$\sigma^x_{A_3}\sigma^z_{A_3}\sigma^x_{A_3}\sigma^z_{B_3}\sigma^x_{B_3}$
		$\|11\rangle$	$\sigma^x_{A_3}\sigma^z_{B_3}\sigma^x_{B_3}$
	$\|\beta_1\rangle_{A_2}\|\gamma_1\rangle_{B_2}$	$\|00\rangle$	$\sigma^x_{A_3}\sigma^x_{B_3}\sigma^z_{B_3}\sigma^x_{B_3}$
		$\|01\rangle$	$\sigma^z_{A_3}\sigma^x_{B_3}\sigma^z_{B_3}\sigma^x_{B_3}$
		$\|10\rangle$	$\sigma^x_{A_3}\sigma^x_{B_3}\sigma^z_{B_3}$
		$\|11\rangle$	$\sigma^z_{A_3}\sigma^x_{B_3}\sigma^z_{B_3}$
$\|\alpha_{10}\rangle_{A_1B_1}$	$\|\beta_0\rangle_{A_2}\|\gamma_0\rangle_{B_2}$	$\|00\rangle$	$\sigma^x_{B_3}$
		$\|01\rangle$	$\sigma^x_{A_3}\sigma^x_{B_3}$
		$\|10\rangle$	$\sigma^z_{B_3}$
		$\|11\rangle$	$\sigma^x_{A_3}\sigma^z_{B_3}$
	$\|\beta_0\rangle_{A_2}\|\gamma_1\rangle_{B_2}$	$\|00\rangle$	$\sigma^x_{A_3}\sigma^z_{A_3}\sigma^x_{B_3}$
		$\|01\rangle$	$\sigma^x_{A_3}\sigma^z_{A_3}\sigma^x_{A_3}\sigma^x_{B_3}$
		$\|10\rangle$	$\sigma^x_{A_3}\sigma^z_{A_3}\sigma^z_{B_3}$
		$\|11\rangle$	$\sigma^x_{A_3}\sigma^z_{A_3}\sigma^x_{A_3}\sigma^z_{B_3}$
	$\|\beta_1\rangle_{A_2}\|\gamma_0\rangle_{B_2}$	$\|00\rangle$	$\sigma^x_{B_3}\sigma^z_{B_3}\sigma^x_{B_3}$
		$\|01\rangle$	$\sigma^x_{A_3}\sigma^x_{B_3}\sigma^z_{B_3}\sigma^x_{B_3}$
		$\|10\rangle$	$\sigma^x_{B_3}$
		$\|11\rangle$	$\sigma^x_{A_3}\sigma^x_{B_3}$
	$\|\beta_1\rangle_{A_2}\|\gamma_1\rangle_{B_2}$	$\|00\rangle$	$\sigma^x_{A_3}\sigma^z_{A_3}\sigma^x_{B_3}\sigma^z_{B_3}\sigma^x_{B_3}$
		$\|01\rangle$	$\sigma^x_{A_3}\sigma^z_{A_3}\sigma^x_{A_3}\sigma^x_{B_3}\sigma^z_{B_3}\sigma^x_{B_3}$
		$\|10\rangle$	$\sigma^x_{A_3}\sigma^z_{A_3}\sigma^x_{B_3}$
		$\|11\rangle$	$\sigma^x_{A_3}\sigma^z_{A_3}\sigma^x_{A_3}\sigma^x_{B_3}$
$\|\alpha_{11}\rangle_{A_1B_1}$	$\|\beta_0\rangle_{A_2}\|\gamma_0\rangle_{B_2}$	$\|00\rangle$	$\sigma^z_{A_3}\sigma^x_{B_3}$
		$\|01\rangle$	$\sigma^z_{A_3}\sigma^x_{A_3}\sigma^z_{A_3}\sigma^x_{B_3}$
		$\|10\rangle$	$\sigma^z_{A_3}\sigma^z_{B_3}$
		$\|11\rangle$	$\sigma^z_{A_3}\sigma^x_{A_3}\sigma^z_{A_3}\sigma^z_{B_3}$
	$\|\beta_0\rangle_{A_2}\|\gamma_1\rangle_{B_2}$	$\|00\rangle$	$\sigma^x_{A_3}\sigma^x_{B_3}$
		$\|01\rangle$	$\sigma^z_{A_3}\sigma^x_{B_3}$
		$\|10\rangle$	$\sigma^x_{A_3}\sigma^z_{B_3}$
		$\|11\rangle$	$\sigma^z_{A_3}\sigma^z_{B_3}$
	$\|\beta_1\rangle_{A_2}\|\gamma_0\rangle_{B_2}$	$\|00\rangle$	$\sigma^z_{A_3}\sigma^z_{B_3}$
		$\|01\rangle$	$\sigma^x_{A_3}\sigma^z_{B_3}$
		$\|10\rangle$	$\sigma^z_{A_3}\sigma^x_{B_3}$

		$\|11\rangle$	$\sigma^x_{A_3}\sigma^x_{B_3}$
	$\|\beta_1\rangle_{A_2}\|\gamma_1\rangle_{B_2}$	$\|00\rangle$	$\sigma^x_{A_3}\sigma^x_{B_3}\sigma^z_{B_3}\sigma^x_{B_3}$
		$\|01\rangle$	$\sigma^z_{A_3}\sigma^x_{B_3}\sigma^z_{B_3}\sigma^x_{B_3}$
		$\|10\rangle$	$\sigma^x_{A_3}\sigma^x_{B_3}$
		$\|11\rangle$	$\sigma^z_{A_3}\sigma^x_{B_3}$
$\|\alpha_{12}\rangle_{A_1B_1}$	$\|\beta_0\rangle_{A_2}\|\gamma_0\rangle_{B_2}$	$\|00\rangle$	$\sigma^x_{A_3}\sigma^x_{B_3}$
		$\|01\rangle$	$\sigma^x_{B_3}$
		$\|10\rangle$	$\sigma^x_{A_3}$
		$\|11\rangle$	I
	$\|\beta_0\rangle_{A_3}\|\gamma_1\rangle_{B_3}$	$\|00\rangle$	$\sigma^x_{A_3}\sigma^z_{A_3}\sigma^x_{A_3}\sigma^x_{B_3}$
		$\|01\rangle$	$\sigma^x_{A_3}\sigma^z_{A_3}\sigma^x_{B_3}$
		$\|10\rangle$	$\sigma^x_{A_3}\sigma^z_{A_3}\sigma^x_{A_3}$
		$\|11\rangle$	$\sigma^x_{A_3}\sigma^z_{A_3}$
	$\|\beta_1\rangle_{A_3}\|\gamma_0\rangle_{B_3}$	$\|00\rangle$	$\sigma^x_{A_3}\sigma^x_{B_3}\sigma^z_{B_3}\sigma^x_{B_3}$
		$\|01\rangle$	$\sigma^x_{B_3}\sigma^z_{B_3}\sigma^x_{B_3}$
		$\|10\rangle$	$\sigma^x_{A_3}\sigma^x_{B_3}\sigma^z_{B_3}$
		$\|11\rangle$	$\sigma^x_{B_3}\sigma^z_{B_3}$
	$\|\beta_1\rangle_{A_3}\|\gamma_1\rangle_{B_3}$	$\|00\rangle$	$\sigma^x_{A_3}\sigma^z_{A_3}\sigma^x_{A_3}\sigma^x_{B_3}\sigma^z_{B_3}\sigma^x_{B_3}$
		$\|01\rangle$	$\sigma^x_{A_3}\sigma^z_{A_3}\sigma^x_{B_3}\sigma^z_{B_3}\sigma^x_{B_3}$
		$\|10\rangle$	$\sigma^x_{A_3}\sigma^z_{A_3}\sigma^x_{A_3}\sigma^x_{B_3}\sigma^z_{B_3}$
		$\|11\rangle$	$\sigma^x_{A_3}\sigma^z_{A_3}\sigma^x_{B_3}\sigma^z_{B_3}$
$\|\alpha_{13}\rangle_{A_1B_1}$	$\|\beta_0\rangle_{A_2}\|\gamma_0\rangle_{B_2}$	$\|00\rangle$	$\sigma^x_{A_3}\sigma^x_{B_3}$
		$\|01\rangle$	$\sigma^z_{A_3}\sigma^x_{B_3}$
		$\|10\rangle$	$\sigma^x_{A_3}$
		$\|11\rangle$	$\sigma^z_{A_3}$
	$\|\beta_0\rangle_{A_3}\|\gamma_1\rangle_{B_3}$	$\|00\rangle$	$\sigma^x_{A_3}\sigma^z_{A_3}\sigma^x_{A_3}\sigma^x_{B_3}$
		$\|01\rangle$	$\sigma^x_{A_3}\sigma^x_{B_3}$
		$\|10\rangle$	$\sigma^x_{A_3}\sigma^z_{A_3}\sigma^x_{A_3}$
		$\|11\rangle$	$\sigma^x_{A_3}$
	$\|\beta_1\rangle_{A_3}\|\gamma_0\rangle_{B_3}$	$\|00\rangle$	$\sigma^x_{A_3}\sigma^x_{B_3}\sigma^z_{B_3}\sigma^x_{B_3}$
		$\|01\rangle$	$\sigma^z_{A_3}\sigma^x_{B_3}\sigma^z_{B_3}\sigma^x_{B_3}$
		$\|10\rangle$	$\sigma^x_{A_3}\sigma^x_{B_3}\sigma^z_{B_3}$
		$\|11\rangle$	$\sigma^z_{A_3}\sigma^x_{B_3}\sigma^z_{B_3}$
	$\|\beta_1\rangle_{A_3}\|\gamma_1\rangle_{B_3}$	$\|00\rangle$	$\sigma^x_{A_3}\sigma^z_{A_3}\sigma^x_{A_3}\sigma^x_{B_3}\sigma^z_{B_3}\sigma^x_{B_3}$
		$\|01\rangle$	$\sigma^x_{A_3}\sigma^x_{B_3}\sigma^z_{B_3}\sigma^x_{B_3}$
		$\|10\rangle$	$\sigma^x_{A_3}\sigma^z_{A_3}\sigma^x_{A_3}\sigma^x_{B_3}\sigma^z_{B_3}$
		$\|11\rangle$	$\sigma^x_{A_3}\sigma^x_{B_3}\sigma^z_{B_3}$

$\|\alpha_{14}\rangle_{A_1B_1}$	$\|\beta_0\rangle_{A_2}\|\gamma_0\rangle_{B_2}$	$\|00\rangle$	$\sigma^x_{A_3}\sigma^x_{B_3}$
		$\|01\rangle$	$\sigma^x_{B_3}$
		$\|10\rangle$	$\sigma^x_{A_3}\sigma^z_{B_3}$
		$\|11\rangle$	$\sigma^z_{B_3}$
	$\|\beta_0\rangle_{A_3}\|\gamma_1\rangle_{B_3}$	$\|00\rangle$	$\sigma^x_{A_3}\sigma^z_{A_3}\sigma^x_{A_3}\sigma^x_{B_3}$
		$\|01\rangle$	$\sigma^x_{A_3}\sigma^z_{A_3}\sigma^x_{B_3}$
		$\|10\rangle$	$\sigma^x_{A_3}\sigma^z_{A_3}\sigma^x_{A_3}\sigma^z_{B_3}$
		$\|11\rangle$	$\sigma^x_{A_3}\sigma^z_{A_3}\sigma^z_{B_3}$
	$\|\beta_1\rangle_{A_3}\|\gamma_0\rangle_{B_3}$	$\|00\rangle$	$\sigma^x_{A_3}\sigma^x_{B_3}\sigma^z_{B_3}\sigma^x_{B_3}$
		$\|01\rangle$	$\sigma^x_{B_3}\sigma^z_{B_3}\sigma^x_{B_3}$
		$\|10\rangle$	$\sigma^x_{A_3}\sigma^x_{B_3}$
		$\|11\rangle$	$\sigma^x_{B_3}$
	$\|\beta_1\rangle_{A_3}\|\gamma_1\rangle_{B_3}$	$\|00\rangle$	$\sigma^x_{A_3}\sigma^z_{A_3}\sigma^x_{A_3}\sigma^x_{B_3}\sigma^z_{B_3}\sigma^x_{B_3}$
		$\|01\rangle$	$\sigma^x_{A_3}\sigma^z_{A_3}\sigma^x_{B_3}\sigma^z_{B_3}\sigma^x_{B_3}$
		$\|10\rangle$	$\sigma^x_{A_3}\sigma^z_{A_3}\sigma^x_{A_3}\sigma^x_{B_3}$
		$\|11\rangle$	$\sigma^x_{A_3}\sigma^z_{A_3}\sigma^x_{B_3}$
$\|\alpha_{15}\rangle_{A_1B_1}$	$\|\beta_0\rangle_{A_2}\|\gamma_0\rangle_{B_2}$	$\|00\rangle$	$\sigma^x_{A_3}\sigma^x_{B_3}$
		$\|01\rangle$	$\sigma^z_{A_3}\sigma^x_{B_3}$
		$\|10\rangle$	$\sigma^x_{A_3}\sigma^z_{B_3}$
		$\|11\rangle$	$\sigma^z_{A_3}\sigma^z_{B_3}$
	$\|\beta_0\rangle_{A_3}\|\gamma_1\rangle_{B_3}$	$\|00\rangle$	$\sigma^x_{A_3}\sigma^z_{A_3}\sigma^x_{A_3}\sigma^x_{B_3}$
		$\|01\rangle$	$\sigma^x_{A_3}\sigma^x_{B_3}$
		$\|10\rangle$	$\sigma^x_{A_3}\sigma^z_{A_3}\sigma^x_{A_3}\sigma^z_{B_3}$
		$\|11\rangle$	$\sigma^x_{A_3}\sigma^z_{B_3}$
	$\|\beta_1\rangle_{A_3}\|\gamma_0\rangle_{B_3}$	$\|00\rangle$	$\sigma^x_{A_3}\sigma^x_{B_3}\sigma^z_{B_3}\sigma^x_{B_3}$
		$\|01\rangle$	$\sigma^z_{A_3}\sigma^x_{B_3}\sigma^z_{B_3}\sigma^x_{B_3}$
		$\|10\rangle$	$\sigma^x_{A_3}\sigma^x_{B_3}$
		$\|11\rangle$	$\sigma^z_{A_3}\sigma^x_{B_3}$
	$\|\beta_1\rangle_{A_3}\|\gamma_1\rangle_{B_3}$	$\|00\rangle$	$\sigma^x_{A_3}\sigma^z_{A_3}\sigma^x_{A_3}\sigma^x_{B_3}\sigma^z_{B_3}\sigma^x_{B_3}$
		$\|01\rangle$	$\sigma^x_{A_3}\sigma^x_{B_3}\sigma^z_{B_3}\sigma^x_{B_3}$
		$\|10\rangle$	$\sigma^x_{A_3}\sigma^z_{A_3}\sigma^x_{A_3}\sigma^x_{B_3}$
		$\|11\rangle$	$\sigma^x_{A_3}\sigma^x_{B_3}$

Appendix B: Complete table for Controlled Bidirectional Remote State Preparation protocol on two-vertex complete graph

The controlled bidirectional remote state preparation protocol on a two-vertex complete graph is summarized in the following table.

TABLE IV: Outcome of measurement performed by Alice and Bob in the first coin state and the unitary operation on their second coin state and measurement performed by Charlie in his two coin state for creating the known single qubit state.

Position basis	A_2, B_2 Coin basis	C_1, C_2 Coin basis	Unitary operation
$\|\alpha_0\rangle_{A_1B_1}$	$\|\beta_0\rangle_{A_2}\|\gamma_0\rangle_{B_2}$	$\|00\rangle$	I
		$\|01\rangle$	$\sigma^x_{B_3}$
		$\|10\rangle$	$\sigma^x_{A_3}$
		$\|11\rangle$	$\sigma^x_{A_3}\sigma^x_{B_3}$
	$\|\beta_0\rangle_{A_2}\|\gamma_1\rangle_{B_2}$	$\|00\rangle$	$\sigma^x_{A_3}\sigma^z_{A_3}$
		$\|01\rangle$	$\sigma^x_{A_3}\sigma^z_{A_3}\sigma^x_{A_3}$
		$\|10\rangle$	$\sigma^x_{A_3}\sigma^z_{A_3}\sigma^x_{B_3}$
		$\|11\rangle$	$\sigma^x_{A_3}\sigma^z_{A_3}\sigma^x_{A_3}\sigma^x_{B_3}$
	$\|\beta_1\rangle_{A_2}\|\gamma_0\rangle_{B_2}$	$\|00\rangle$	$\sigma^x_{B_3}\sigma^z_{B_3}$
		$\|01\rangle$	$\sigma^x_{A_3}\sigma^x_{B_3}\sigma^z_{B_3}$
		$\|10\rangle$	$\sigma^x_{B_3}\sigma^z_{B_3}\sigma^x_{B_3}$
		$\|11\rangle$	$\sigma^x_{A_3}\sigma^x_{B_3}\sigma^z_{B_3}\sigma^x_{B_3}$
	$\|\beta_1\rangle_{A_2}\|\gamma_1\rangle_{B_2}$	$\|00\rangle$	$\sigma^x_{A_3}\sigma^z_{A_3}\sigma^x_{B_3}\sigma^z_{B_3}$
		$\|01\rangle$	$\sigma^x_{A_3}\sigma^z_{A_3}\sigma^x_{A_3}\sigma^x_{B_3}\sigma^z_{B_3}$
		$\|10\rangle$	$\sigma^x_{A_3}\sigma^z_{A_3}\sigma^x_{B_3}\sigma^z_{B_3}\sigma^x_{B_3}$
		$\|11\rangle$	$\sigma^x_{A_3}\sigma^z_{A_3}\sigma^x_{A_3}\sigma^x_{B_3}\sigma^z_{B_3}\sigma^x_{B_3}$
$\|\alpha_1\rangle_{A_1B_1}$	$\|\beta_0\rangle_{A_2}\|\gamma_0\rangle_{B_2}$	$\|00\rangle$	$\sigma^x_{A_3}$
		$\|01\rangle$	I
		$\|10\rangle$	$\sigma^x_{A_3}\sigma^x_{B_3}$
		$\|11\rangle$	$\sigma^x_{B_3}$
	$\|\beta_0\rangle_{A_2}\|\gamma_1\rangle_{B_2}$	$\|00\rangle$	$\sigma^x_{A_3}\sigma^z_{A_3}\sigma^x_{A_3}$
		$\|01\rangle$	$\sigma^x_{A_3}\sigma^z_{A_3}$
		$\|10\rangle$	$\sigma^x_{A_3}\sigma^z_{A_3}\sigma^x_{A_3}\sigma^x_{B_3}$
		$\|11\rangle$	$\sigma^x_{A_3}\sigma^z_{A_3}\sigma^x_{B_3}$
	$\|\beta_1\rangle_{A_2}\|\gamma_0\rangle_{B_2}$	$\|00\rangle$	$\sigma^x_{A_3}\sigma^x_{B_3}\sigma^z_{B_3}$
		$\|01\rangle$	$\sigma^x_{B_3}\sigma^z_{B_3}$
		$\|10\rangle$	$\sigma^x_{A_3}\sigma^x_{B_3}\sigma^z_{B_3}\sigma^x_{B_3}$
		$\|11\rangle$	$\sigma^x_{B_3}\sigma^z_{B_3}\sigma^x_{B_3}$
	$\|\beta_1\rangle_{A_2}\|\gamma_1\rangle_{B_2}$	$\|00\rangle$	$\sigma^x_{A_3}\sigma^z_{A_3}\sigma^x_{A_3}\sigma^x_{B_3}\sigma^z_{B_3}$
		$\|01\rangle$	$\sigma^x_{A_3}\sigma^z_{A_3}\sigma^x_{B_3}\sigma^z_{B_3}$
		$\|10\rangle$	$\sigma^x_{A_3}\sigma^z_{A_3}\sigma^x_{A_3}\sigma^x_{B_3}\sigma^z_{B_3}\sigma^x_{B_3}$
		$\|11\rangle$	$\sigma^x_{A_3}\sigma^z_{A_3}\sigma^x_{B_3}\sigma^z_{B_3}\sigma^x_{B_3}$

$\|\alpha_2\rangle_{A_1B_1}$	$\|\beta_0\rangle_{A_2}\|\gamma_0\rangle_{B_2}$	$\|00\rangle$	$\sigma^x_{B_3}$
		$\|01\rangle$	$\sigma^x_{A_3}\sigma^x_{B_3}$
		$\|10\rangle$	I
		$\|11\rangle$	$\sigma^x_{A_3}$
	$\|\beta_0\rangle_{A_2}\|\gamma_1\rangle_{B_2}$	$\|00\rangle$	$\sigma^x_{A_3}\sigma^z_{A_3}\sigma^x_{B_3}$
		$\|01\rangle$	$\sigma^x_{A_3}\sigma^z_{A_3}\sigma^x_{A_3}\sigma^x_{B_3}$
		$\|10\rangle$	$\sigma^x_{A_3}\sigma^z_{A_3}$
		$\|11\rangle$	$\sigma^x_{A_3}\sigma^z_{A_3}\sigma^x_{A_3}$
	$\|\beta_1\rangle_{A_2}\|\gamma_0\rangle_{B_2}$	$\|00\rangle$	$\sigma^x_{B_3}\sigma^z_{B_3}\sigma^x_{B_3}$
		$\|01\rangle$	$\sigma^x_{A_3}\sigma^x_{B_3}\sigma^z_{B_3}\sigma^x_{B_3}$
		$\|10\rangle$	$\sigma^x_{B_3}\sigma^z_{B_3}$
		$\|11\rangle$	$\sigma^x_{A_3}\sigma^x_{B_3}\sigma^z_{B_3}$
	$\|\beta_1\rangle_{A_2}\|\gamma_1\rangle_{B_2}$	$\|00\rangle$	$\sigma^x_{A_3}\sigma^z_{A_3}\sigma^x_{B_3}\sigma^z_{B_3}\sigma^x_{B_3}$
		$\|01\rangle$	$\sigma^x_{A_3}\sigma^z_{A_3}\sigma^x_{A_3}\sigma^x_{B_3}\sigma^z_{B_3}\sigma^x_{B_3}$
		$\|10\rangle$	$\sigma^x_{A_3}\sigma^z_{A_3}\sigma^x_{B_3}\sigma^z_{B_3}$
		$\|11\rangle$	$\sigma^x_{A_3}\sigma^z_{A_3}\sigma^x_{A_3}\sigma^x_{B_3}\sigma^z_{B_3}$
$\|\alpha_3\rangle_{A_1B_1}$	$\|\beta_0\rangle_{A_2}\|\gamma_0\rangle_{B_2}$	$\|00\rangle$	$\sigma^x_{A_3}\sigma^x_{B_3}$
		$\|01\rangle$	$\sigma^x_{B_3}$
		$\|10\rangle$	$\sigma^x_{A_3}$
		$\|11\rangle$	I
	$\|\beta_0\rangle_{A_3}\|\gamma_1\rangle_{B_3}$	$\|00\rangle$	$\sigma^x_{A_3}\sigma^z_{A_3}\sigma^x_{A_3}\sigma^x_{B_3}$
		$\|01\rangle$	$\sigma^x_{A_3}\sigma^z_{A_3}\sigma^x_{B_3}$
		$\|10\rangle$	$\sigma^x_{A_3}\sigma^z_{A_3}\sigma^x_{A_3}$
		$\|11\rangle$	$\sigma^x_{A_3}\sigma^z_{A_3}$
	$\|\beta_1\rangle_{A_3}\|\gamma_0\rangle_{B_3}$	$\|00\rangle$	$\sigma^x_{A_3}\sigma^x_{B_3}\sigma^z_{B_3}\sigma^x_{B_3}$
		$\|01\rangle$	$\sigma^x_{B_3}\sigma^z_{B_3}\sigma^x_{B_3}$
		$\|10\rangle$	$\sigma^x_{A_3}\sigma^x_{B_3}\sigma^z_{B_3}$
		$\|11\rangle$	$\sigma^x_{B_3}\sigma^z_{B_3}$
	$\|\beta_1\rangle_{A_3}\|\gamma_1\rangle_{B_3}$	$\|00\rangle$	$\sigma^x_{A_3}\sigma^z_{A_3}\sigma^x_{A_3}\sigma^x_{B_3}\sigma^z_{B_3}\sigma^x_{B_3}$
		$\|01\rangle$	$\sigma^x_{A_3}\sigma^z_{A_3}\sigma^x_{B_3}\sigma^z_{B_3}\sigma^x_{B_3}$
		$\|10\rangle$	$\sigma^x_{A_3}\sigma^z_{A_3}\sigma^x_{A_3}\sigma^x_{B_3}\sigma^z_{B_3}$
		$\|11\rangle$	$\sigma^x_{A_3}\sigma^z_{A_3}\sigma^x_{B_3}\sigma^z_{B_3}$

[1] Charles H. Bennett, Gilles Brassard, Claude Crépeau, Richard Jozsa, Asher Peres, and William K. Wootters. Teleporting an unknown quantum state via dual classical and einstein-podolsky-rosen channels. *Phys. Rev. Lett.*, 70:1895–1899, Mar 1993.

[2] Dik Bouwmeester, Jian-Wei Pan, Klaus Mattle, Manfred Eibl, Harald Weinfurter, and Anton Zeilinger. Experimental quantum teleportation. *Nature*, 390(6660):575–579, Dec 1997.

[3] Gustavo Rigolin. Quantum teleportation of an arbitrary two-qubit state and its relation to multipartite entanglement. *Phys. Rev. A*, 71:032303, Mar 2005.

[4] Arun Sebastian, Afnan. N. Mansar, and N. C. Randeep. Beyond qubits: An extensive noise analysis for qutrit quantum teleportation. *International Journal of Theoretical Physics*, 62(12):258, Nov 2023.

[5] N. C. Randeep, C. Anukrishna, and A. K. Neha Raj. Quantum teleportation scheme using entangled two ququads and its noise effects. *Quantum Information Processing*, 23(5):192, May 2024.

[6] Artur K. Ekert. Quantum cryptography based on bell's theorem. *Phys. Rev. Lett.*, 67:661–663, Aug 1991.

[7] S. Pirandola, U. L. Andersen, L. Banchi, M. Berta, D. Bunandar, R. Colbeck, D. Englund, T. Gehring, C. Lupo, C. Ottaviani, J. L. Pereira, M. Razavi, J. Shamsul Shaari, M. Tomamichel, V. C. Usenko, G. Vallone, P. Villoresi, and P. Wallden. Advances in quantum cryptography. *Adv. Opt. Photon.*, 12(4):1012–1236, Dec 2020.

[8] Nicolas Gisin, Grégoire Ribordy, Wolfgang Tittel, and Hugo Zbinden. Quantum cryptography. *Rev. Mod. Phys.*, 74:145–195, Mar 2002.

[9] Charles H. Bennett and Stephen J. Wiesner. Communication via one- and two-particle operators on einstein-podolsky-rosen states. *Phys. Rev. Lett.*, 69:2881–2884, Nov 1992.

[10] Aram Harrow, Patrick Hayden, and Debbie Leung. Superdense coding of quantum states. *Phys. Rev. Lett.*, 92:187901, May 2004.

[11] Z. Shadman, H. Kampermann, D. Bruß, and C. Macchiavello. Distributed superdense coding over noisy channels. *Phys. Rev. A*, 85:052306, May 2012.

[12] Hoi-Kwong Lo. Classical-communication cost in distributed quantum-information processing: A generalization of quantum-communication complexity. *Phys. Rev. A*, 62:012313, Jun 2000.

[13] Charles H. Bennett, David P. DiVincenzo, Peter W. Shor, John A. Smolin, Barbara M. Terhal, and William K. Wootters. Remote state preparation. *Phys. Rev. Lett.*, 87:077902, Jul 2001.

[14] Nicholas A. Peters, Julio T. Barreiro, Michael E. Goggin, Tzu-Chieh Wei, and Paul G. Kwiat. Remote state preparation: Arbitrary remote control of photon polarization. *Phys. Rev. Lett.*, 94:150502, Apr 2005.

[15] Igor Devetak and Toby Berger. Low-entanglement remote state preparation. *Phys. Rev. Lett.*, 87:197901, Oct 2001.

[16] Dominic W. Berry and Barry C. Sanders. Optimal remote state preparation. *Phys. Rev. Lett.*, 90:057901, Feb 2003.

[17] Mark Hillery, Vladimír Bužek, and André Berthiaume. Quantum secret sharing. *Phys. Rev. A*, 59:1829–1834, Mar 1999.

[18] Daniel Gottesman. Theory of quantum secret sharing. *Phys. Rev. A*, 61:042311, Mar 2000.

[19] W. Tittel, H. Zbinden, and N. Gisin. Experimental demonstration of quantum secret sharing. *Phys. Rev. A*, 63:042301, Mar 2001.

[20] Sudhir Kumar Singh and R. Srikanth. Generalized quantum secret sharing. *Phys. Rev. A*, 71:012328, Jan 2005.

[21] Ba An Nguyen. Quantum dialogue. *Physics Letters A*, 328(1):6–10, 2004.

[22] MAN Zhong-Xiao, ZHANG Zhan-Jun, and LI Yong. Quantum dialogue revisited. *Chin. Phys. Lett.*, 22(1):22–24, 2005.

[23] Gan Gao. Two quantum dialogue protocols without information leakage. *Optics Communications*, 283(10):2288–2293, 2010.

[24] G. Abal, R. Siri, A. Romanelli, and R. Donangelo. Quantum walk on the line: Entanglement and nonlocal initial conditions. *Phys. Rev. A*, 73:042302, Apr 2006.

[25] Ivens Carneiro, Meng Loo, Xibai Xu, Mathieu Girerd, Viv Kendon, and Peter L Knight. Entanglement

in coined quantum walks on regular graphs. *New Journal of Physics*, 7(1):156, jul 2005.

[26] Salvador Elías Venegas-Andraca. Quantum walks: a comprehensive review. *Quantum Information Processing*, 11(5):1015–1106, Oct 2012.

[27] J Kempe. Quantum random walks: An introductory overview. *Contemporary Physics*, 44(4):307–327, 2003.

[28] Karuna Kadian, Sunita Garhwal, and Ajay Kumar. Quantum walk and its application domains: A systematic review. *Computer Science Review*, 41:100419, 2021.

[29] F. Zähringer, G. Kirchmair, R. Gerritsma, E. Solano, R. Blatt, and C. F. Roos. Realization of a quantum walk with one and two trapped ions. *Phys. Rev. Lett.*, 104:100503, Mar 2010.

[30] A. Schreiber, K. N. Cassemiro, V. Potoček, A. Gábris, P. J. Mosley, E. Andersson, I. Jex, and Ch. Silberhorn. Photons walking the line: A quantum walk with adjustable coin operations. *Phys. Rev. Lett.*, 104:050502, Feb 2010.

[31] C. A. Ryan, M. Laforest, J. C. Boileau, and R. Laflamme. Experimental implementation of a discrete-time quantum random walk on an nmr quantum-information processor. *Phys. Rev. A*, 72:062317, Dec 2005.

[32] Peng Jia-yin and Lei Hong-xuan. Cyclic remote state preparation. *International Journal of Theoretical Physics*, 60(4):1593–1602, Apr 2021.

[33] Yu Wang, Yun Shang, and Peng Xue. Generalized teleportation by quantum walks. *Quantum Information Processing*, 16(9):221, Jul 2017.

[34] Heng-Ji Li, Xiu-Bo Chen, Ya-Lan Wang, Yan-Yan Hou, and Jian Li. A new kind of flexible quantum teleportation of an arbitrary multi-qubit state by multi-walker quantum walks. *Quantum Information Processing*, 18(9):266, Jul 2019.

[35] Wei-Min Shi, Meng-Xuan Bai, Yi-Hua Zhou, and Yu-Guang Yang. Controlled quantum teleportation based on quantum walks. *Quantum Information Processing*, 22(1):34, Dec 2022.

[36] Fahimeh Zarmehi, Siamak Talebi, and Mohammad Reza Pourkarimi. Quantum walk-based controlled quantum teleportation schemes under the effect of decoherence in markovian and non-markovian regimes. *Quantum Information Processing*, 22(12):436, Dec 2023.

[37] Yun Shang, Yu Wang, Meng Li, and Ruqian Lu. Quantum communication protocols by quantum walks with two coins. *Europhysics Letters*, 124(6):60009, jan 2019.

[38] Yagnik Chatterjee, Vipin Devrari, Bikash K. Behera, and Prasanta K. Panigrahi. Experimental realization of quantum teleportation using coined quantum walks. *Quantum Information Processing*, 19(1):31, Dec 2019.

[39] A. S. Abay Krishna, K. K. Naseeda, and N. C. Randeep. Bidirectional quantum teleportation using quantum walks. *Quantum Information Processing*, 24(11):348, Oct 2025.

[40] Binayak S. Choudhury, Manoj Kumar Mandal, and Soumen Samanta. Remote state preparation of qubits using quantum walks in the presence of controller. *International Journal of Theoretical Physics*, 63(3):71, Mar 2024.