A Framework of Distributed Source Encryption using Mutual Information Security Criterion and the Strong Converse Theorem

Yasutada Oohama and Bagus Santoso
University of Electro-Communications, Tokyo, Japan
Email: {oohama,santoso.bagus}@uec.ac.jp

arXiv:2507.13294v2 [cs.IT] 25 Jul 2025

***Abstract*—We reinvestigate the general distributed secure source coding based on the common key cryptosystem proposed by Oohama and Santoso (ITW 2021). They proposed a framework of distributed source encryption and derived the necessary and sufficient conditions to have reliable and secure transmission. However, the bounds of the rate region, which specifies both necessary and sufficient conditions to have reliable and secure transmission under the proposed cryptosystem, were derived based on a self-tailored *non-standard* security criterion. In this paper we adopt the *standard security criterion*, i.e., *standard mutual information*. We successfully establish the bounds of the rate region based on this security criterion. Information spectrum method and a variant of Birkhoff-von Neumann theorem play important roles in deriving our result.**

I. Introduction

In ITW 2021, Oohama and Santoso proposed a general framework for distributed source coding with encryption [1]. This framework covers the secrecy amplification problem for distributed encrypted sources with correlated keys using post-encryption-compression (PEC) [2], [3]. However, in [1], the necessary and sufficient conditions for the security of the proposed framework were derived under a self-tailored *non-standard security criterion*. A subsequent work [4] attempted to derive the condition under another non-standard security criterion, which is claimed as a natural variant of the standard mutual information. However, establishing the necessary and sufficient conditions of the security based on the standard security criterion, i.e., *standard mutual information*, remained as an open problem.

In this paper, we try to solve the open problem. Our observation reveals that the failure of previous attempts is mainly because the security criterion is used as the starting point for proving the *strong converse*, the necessary conditions for reliable and secure transmission. We discover that this method greatly reduces the flexibility to construct the proof. We develop a new technique to prove the strong converse without sacrificing the *standard mutual information* as the security criterion. Our technique proceeds not by using the *mutual information*, which is the security criterion, as the starting point, but instead the *conditional mutual information*. Based on the new technique we derive new results on the bounds of the rate region. Our main results can be summarized as follows:

(1) The outer bound matches the inner bound of the rate region in the following cases:
   (a) sources are independent,
   (b) the entropy of each source is less than the entropy of each corresponding key and the entropy of the combined sources is less than the entropy of the combined keys.
(2) The outer bound coincides with the inner bound of the sum rate part of the rate region in general case.

Our study in this paper closely relates to several previous works on the PEC, e.g., Johnson et al. [5], Klinc et al. [6]. Our study also has a close connection with several previous works on the Shannon cipher system, e.g. [7], [8] [9].

II. Secure Source Coding Problem

A. Preliminaries

In this subsection, we show the basic notations and related consensus used in this paper.

Random Sources of Information and Keys: Let (X_1, X_2) be a pair of random variables from a finite set $\mathcal{X}_1 \times \mathcal{X}_2$. Let $\{(X_{1,t}, X_{2,t})\}_{t=1}^{\infty}$ be a stationary *discrete memoryless source* (DMS) such that for each $t = 1, 2, \ldots$, the pair $(X_{1,t}, X_{2,t})$ takes values in finite set $\mathcal{X}_1 \times \mathcal{X}_2$ and obeys the same distribution as that of (X_1, X_2) denoted by $p_{X_1X_2} = \{p_{X_1X_2}(x_1, x_2)\}_{(x_1,x_2)\in\mathcal{X}_1\times\mathcal{X}_2}$. The stationary DMS $\{(X_{1,t}, X_{2,t})\}_{t=1}^{\infty}$ is specified with $p_{X_1X_2}$. Also, let (K_1, K_2) be a pair of random variables taken from the same finite set $\mathcal{X}_1 \times \mathcal{X}_2$ representing the pair of keys used for encryption at two separate terminals, of which the detailed description will be presented later. Similarly, let $\{(K_{1,t}, K_{2,t})\}_{t=1}^{\infty}$ be a stationary discrete memoryless source such that for each $t = 1, 2, \ldots$, the pair $(K_{1,t}, K_{2,t})$ takes values in finite set $\mathcal{X}_1 \times \mathcal{X}_2$ and obeys the same distribution as that of (K_1, K_2) denoted by $p_{K_1K_2} = \{p_{K_1K_2}(k_1, k_2)\}_{(k_1,k_2)\in\mathcal{X}_1\times\mathcal{X}_2}$. The stationary DMS $\{(K_{1,t}, K_{2,t})\}_{t=1}^{\infty}$ is specified with $p_{K_1K_2}$.

Random Variables and Sequences: We write the sequence of random variables with length n from the information source as follows: $\boldsymbol{X}_1 := X_{1,1}X_{1,2}\cdots X_{1,n}$, $\boldsymbol{X}_2 := X_{2,1}X_{2,2}\cdots X_{2,n}$. Similarly, the strings with length n of $\mathcal{X}_1^n$ and $\mathcal{X}_2^n$ are written as $\boldsymbol{x}_1 := x_{1,1}x_{1,2}\cdots x_{1,n} \in \mathcal{X}_1^n$ and $\boldsymbol{x}_2 := x_{2,1}x_{2,2}\cdots x_{2,n} \in \mathcal{X}_2^n$ respectively. For $(\boldsymbol{x}_1, \boldsymbol{x}_2) \in \mathcal{X}_1^n \times \mathcal{X}_2^n$, $p_{\boldsymbol{X}_1\boldsymbol{X}_2}(\boldsymbol{x}_1, \boldsymbol{x}_2)$ stands for the probability of the occurrence of $(\boldsymbol{x}_1, \boldsymbol{x}_2)$. When

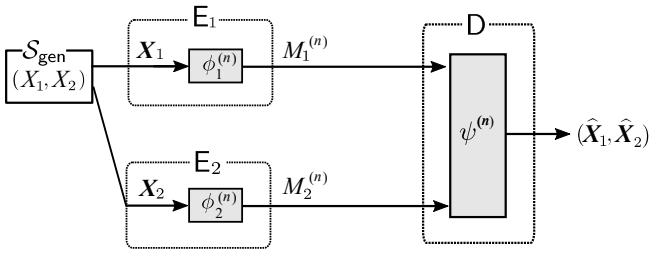

Fig. 1. Distributed source coding without encryption.

the information source is memoryless specified with $p_{X_1X_2}$, we have the following equation holds: $p_{\boldsymbol{X}_1\boldsymbol{X}_2}(\boldsymbol{x}_1, \boldsymbol{x}_2) = \prod_{t=1}^{n} p_{X_1X_2}(x_{1,t}, x_{2,t})$. In this case we write $p_{\boldsymbol{X}_1\boldsymbol{X}_2}(\boldsymbol{x}_1, \boldsymbol{x}_2)$ as $p^n_{X_1X_2}(\boldsymbol{x}_1, \boldsymbol{x}_2)$. Similar notations are used for other random variables and sequences.

Consensus : Without loss of generality, throughout this paper, we assume that $\mathcal{X}_1$ and $\mathcal{X}_2$ are finite fields. Throughout this paper all logarithms are taken to the base 2.

B. Basic System Description

Let the information sources and keys be generated independently by different parties $\mathcal{S}_{\mathsf{gen}}$ and $\mathcal{K}_{\mathsf{gen}}$ respectively. In our setting, we assume the followings.

- The random keys $\boldsymbol{K}_1$ and $\boldsymbol{K}_2$ are generated by $\mathcal{K}_{\mathsf{gen}}$.
- The key $\boldsymbol{K}_1$ is correlated to $\boldsymbol{K}_2$.
- The sources $\boldsymbol{X}_1$ and $\boldsymbol{X}_2$ are generated by $\mathcal{S}_{\mathsf{gen}}$ and are correlated to each other.
- The sources are independent to the keys.

<u>*Distributed source coding without encryption:*</u> The two correlated random sources $\boldsymbol{X}_1$ and $\boldsymbol{X}_2$ from $\mathcal{S}_{\mathsf{gen}}$ be sent to two separated nodes E_1 and E_2 respectively. Further settings of the system are described as follows. Those are also shown in Fig. 1.

1) *Encoding Process:* For each $i = 1, 2$, at the node E_i, the encoder function $\phi_i^{(n)} : \mathcal{X}_i^n \to \mathcal{M}_i^{(n)}$ observes $\boldsymbol{X}_i$ to generate $M_i^{(n)} = \phi_i^{(n)}(\boldsymbol{X}_i)$.
2) *Transmission:* Next, the encoded sources $M_i^{(n)}, i = 1, 2$ are sent to the information processing center D through two *noiseless* channels.
3) *Decoding Process:* In D, the decoder function $\psi^{(n)} : \mathcal{M}_1^{(n)} \times \mathcal{M}_2^{(n)} \to \mathcal{X}_1^n \times \mathcal{X}_2^n$ observes $M_i^{(n)}, i = 1, 2$ to output $(\widehat{\boldsymbol{X}}_1, \widehat{\boldsymbol{X}}_2)$. Here we set

$$\begin{aligned}(\widehat{\boldsymbol{X}}_1, \widehat{\boldsymbol{X}}_2) :=& \psi^{(n)}(M_1^{(n)}, M_2^{(n)}) \\ =& \psi^{(n)}\left(\phi_1^{(n)}(\boldsymbol{X}_1), \phi_2^{(n)}(\boldsymbol{X}_2)\right).\end{aligned}$$

For the above $(\phi_1^{(n)}, \phi_2^{(n)}, \psi^{(n)})$, we define the set $\mathcal{D}^{(n)}$ of correct decoding by

$$\begin{aligned}\mathcal{D}^{(n)} := \{&(\boldsymbol{x}_1, \boldsymbol{x}_2) \in \mathcal{X}_1^n \times \mathcal{X}_2^n : \\ &\psi^{(n)}(\phi_1^{(n)}(\boldsymbol{x}_1), \phi_2^{(n)}(\boldsymbol{x}_2)) = (\boldsymbol{x}_1, \boldsymbol{x}_2)\}.\end{aligned}$$

<u>*Distributed source coding with encryption:*</u> The two correlated random sources $\boldsymbol{X}_1$ and $\boldsymbol{X}_2$ from $\mathcal{S}_{\mathsf{gen}}$ are sent to two separated nodes L_1 and L_2, respectively. The two random keys

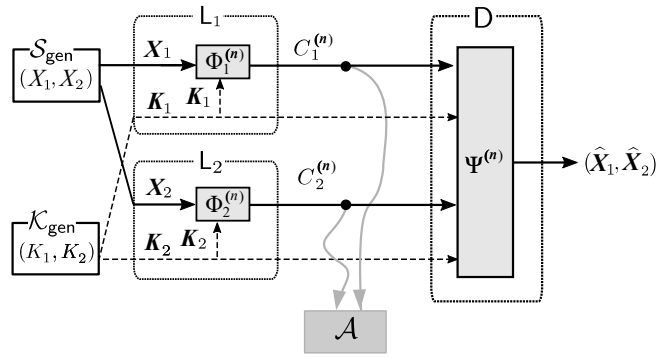

Fig. 2. Distributed source coding with encryption.

$\boldsymbol{K}_1$ and $\boldsymbol{K}_2$ from $\mathcal{K}_{\mathsf{gen}}$, are also sent to L_1 and and L_2, respectively. Further settings of our system are described as follows. Those are also shown in Fig. 2.

1) *Source Processing:* For each $i = 1, 2$, at the node L_i, $\boldsymbol{X}_i$ is encrypted with the key $\boldsymbol{K}_i$ using the encryption function $\Phi_i^{(n)} : \mathcal{X}_i^n \times \mathcal{X}_i^n \to \mathcal{C}_i^{(n)}$. For each $i = 1, 2$, the ciphertext $C_i^{(n)}$ of $\boldsymbol{X}_i$ is given by $C_i^{(n)} = \Phi_i^{(n)}(\boldsymbol{K}_i, \boldsymbol{X}_i)$. On the encryption function $\Phi_i^{(n)}, i = 1, 2$, we use the following notation:

$$\Phi_i^{(n)}(\boldsymbol{K}_i, \boldsymbol{X}_i) = \Phi_{i,\boldsymbol{K}_i}^{(n)}(\boldsymbol{X}_i) = \Phi_{i,\boldsymbol{X}_i}^{(n)}(\boldsymbol{K}_i).$$

2) *Transmission:* Next, the ciphertext $C_i^{(n)}, i = 1, 2$ are sent to the information processing center D through two *public* communication channels. Meanwhile, the key $\boldsymbol{K}_i, i = 1, 2$, are sent to D through two *private* communication channels.
3) *Sink Node Processing:* In D, we decrypt the ciphertext $(\widehat{\boldsymbol{X}}_1, \widehat{\boldsymbol{X}}_2)$ from $C_i^{(n)}, i = 1, 2$, using the key $\boldsymbol{K}_i, i = 1, 2$, through the corresponding decryption procedure $\Psi^{(n)}$ defined by $\Psi^{(n)} : \mathcal{X}_1^n \times \mathcal{X}_2^n \times \mathcal{C}_1^{(n)} \times \mathcal{C}_2^{(n)} \to \mathcal{X}_1^n \times \mathcal{X}_2^n$. Here we set

$$(\widehat{\boldsymbol{X}}_1, \widehat{\boldsymbol{X}}_2) := \Psi^{(n)}(\boldsymbol{K}_1, \boldsymbol{K}_2, C_1^{(n)}, C_2^{(n)}).$$

More concretely, the decoder outputs the unique pair $(\widehat{\boldsymbol{X}}_1, \widehat{\boldsymbol{X}}_2)$ from $(\Phi_{1,\boldsymbol{K}_1}^{(n)})^{-1}(C_1^{(n)}) \times (\Phi_{2,\boldsymbol{K}_1}^{(n)})^{-1}(C_2^{(n)})$ in a proper manner. On the decryption function $\Psi^{(n)}$, we use the following notation:

$$\begin{aligned}&\Psi^{(n)}(\boldsymbol{K}_1, \boldsymbol{K}_2, C_1^{(n)}, C_2^{(n)}) = \Psi_{\boldsymbol{K}_1,\boldsymbol{K}_2}^{(n)}(C_1^{(n)}, C_2^{(n)}) \\ &= \Psi_{C_1^{(n)},C_2^{(n)}}^{(n)}(\boldsymbol{K}_1, \boldsymbol{K}_2).\end{aligned}$$

Fix any $(\boldsymbol{K}_1, \boldsymbol{K}_2) = (\boldsymbol{k}_1, \boldsymbol{k}_2) \in \mathcal{X}_1^n \times \mathcal{X}_2^n$. For this $(\boldsymbol{K}_1, \boldsymbol{K}_2)$ and for $(\Phi_1^{(n)}, \Phi_2^{(n)}, \Psi^{(n)})$, we define the set $\mathcal{D}_{\boldsymbol{k}_1,\boldsymbol{k}_2}^{(n)}$ of correct decoding by

$$\begin{aligned}\mathcal{D}_{\boldsymbol{k}_1,\boldsymbol{k}_2}^{(n)} := \{&(\boldsymbol{x}_1, \boldsymbol{x}_2) \in \mathcal{X}_1^n \times \mathcal{X}_2^n : \\ &\Psi^{(n)}(\Phi_1^{(n)}(\boldsymbol{k}_1, \boldsymbol{x}_1), (\Phi_2^{(n)}(\boldsymbol{k}_2, \boldsymbol{x}_2)) = (\boldsymbol{x}_1, \boldsymbol{x}_2)\}.\end{aligned}$$

We require that the cryptosystem $(\Phi_1^{(n)}, \Phi_2^{(n)}, \Psi^{(n)})$ must satisfy the following condition.

Condition: For each distributed source encryption system $(\Phi_1^{(n)}, \Phi_2^{(n)}, \Psi^{(n)})$, there exists a distributed source coding system $(\phi_1^{(n)}, \phi_2^{(n)}, \psi^{(n)})$ such that for any $(\boldsymbol{k}_1, \boldsymbol{k}_2) \in \mathcal{X}_1^n \times \mathcal{X}_2^n$ and for any $(\boldsymbol{x}_1, \boldsymbol{x}_2) \in \mathcal{X}_1^n \times \mathcal{X}_2^n$,

$$\begin{aligned}&\Psi^{(n)}_{\boldsymbol{k}_1,\boldsymbol{k}_2}(\Phi^{(n)}_{1,\boldsymbol{k}_1}(\boldsymbol{x}_1), \Phi^{(n)}_{2,\boldsymbol{k}_2}(\boldsymbol{x}_2))\\ &= \psi^{(n)}(\phi_1^{(n)}(\boldsymbol{x}_1), \phi_2^{(n)}(\boldsymbol{x}_2)).\end{aligned}$$

The above condition implies that

$$\mathcal{D}^{(n)} = \mathcal{D}^{(n)}_{\boldsymbol{k}_1,\boldsymbol{k}_2}, \forall(\boldsymbol{k}_1, \boldsymbol{k}_2) \in \mathcal{X}_1^n \times \mathcal{X}_2^n.$$

For each $i = 1, 2$, we set

$$(\mathcal{D}^{(n)})_i = \{\boldsymbol{x}_i : (\boldsymbol{x}_1, \boldsymbol{x}_2) \in \mathcal{D}^{(n)} \text{ for some } \boldsymbol{x}_{3-i}\}. \quad (1)$$

For each $i = 1, 2$ and each $\boldsymbol{x}_i \in (\mathcal{D}^{(n)})_i$, we set

$$\mathcal{D}^{(n)}_{i|3-i}(\boldsymbol{x}_i|\boldsymbol{x}_{3-i}) := \{\boldsymbol{x}_i : (\boldsymbol{x}_1, \boldsymbol{x}_2) \in \mathcal{D}^{(n)}\}.$$

We have the following properties on $\mathcal{D}^{(n)}$.

Property 1: If $(\boldsymbol{x}_1, \boldsymbol{x}_2), (\boldsymbol{x}'_1, \boldsymbol{x}'_2) \in \mathcal{D}^{(n)}$ and $(\boldsymbol{x}_1, \boldsymbol{x}_2) \neq (\boldsymbol{x}'_1, \boldsymbol{x}'_2)$, then

$$(\Phi^{(n)}_{1,\boldsymbol{k}_1}(\boldsymbol{x}_1), \Phi^{(n)}_{2,\boldsymbol{k}_2}(\boldsymbol{x}_2)) \neq (\Phi^{(n)}_{1,\boldsymbol{k}_1}(\boldsymbol{x}'_1), \Phi^{(n)}_{2,\boldsymbol{k}_2}(\boldsymbol{x}'_2)).$$

Specifically, for each $i = 1, 2$ and each $\boldsymbol{x}_i \in \mathcal{D}^{(n)}(\boldsymbol{x}_{3-i})$,

$$\Phi^{(n)}_{i,\boldsymbol{k}_i}(\boldsymbol{x}_i) \neq \Phi^{(n)}_{i,\boldsymbol{k}_i}(\boldsymbol{x}'_i).$$

Proof of Property 1 is given in Appendix A. From Property 1, we have the following result, which is a key result of this paper.

Lemma 1: $\forall(c_1, c_2) \in \mathcal{C}_1^{(n)} \times \mathcal{C}_2^{(n)}$, we have the following:

$$\sum_{\boldsymbol{x}_i \in \mathcal{D}^{(n)}_{i|3-i}(\boldsymbol{x}_{3-i})} p_{C_i^{(n)}|\boldsymbol{X}_1\boldsymbol{X}_2}(c_i|\boldsymbol{x}_1, \boldsymbol{x}_2) \leq 1 \text{ for } i = 1, 2, \quad (2)$$

$$\sum_{(\boldsymbol{x}_1,\boldsymbol{x}_2) \in \mathcal{D}^{(n)}} p_{C_1^{(n)}C_2^{(n)}|\boldsymbol{X}_1\boldsymbol{X}_2}(c_1, c_2|\boldsymbol{x}_1, \boldsymbol{x}_2) \leq 1. \quad (3)$$

Proof of Lemma 1 is given in Appendix B. This lemma can be regarded as an extension of the Birkhoff-von Neumann theorem [10].

C. Security Criterion and Problem Formulation

In the following arguments all logarithms are taken to the base two. The adversary $\mathcal{A}$ tries to estimate $(\boldsymbol{X}_1, \boldsymbol{X}_2) \in \mathcal{X}_1^n \times \mathcal{X}_2^n$ from $(C_1^{m_1}, C_2^{m_2})$. The mutual information (MI) between $(\boldsymbol{X}_1, \boldsymbol{X}_2)$ and $(C_1^{(n)}, C_2^{(n)})$ denoted by

$$\Delta^{(n)}_{\mathrm{MI}} := I(C_1^{m_1}C_2^{m_2}; \boldsymbol{X}_1\boldsymbol{X}_2)$$

indicates a leakage of information on $(\boldsymbol{X}_1, \boldsymbol{X}_2)$ from $(C_1^{(n)}, C_2^{(n)})$. In this sense it seems to be quite natural to adopt the mutual information $\Delta^{(n)}_{\mathrm{MI}}$ as a security criterion.

Defining Reliability and Security: The decoding process is successful if $(\widehat{\boldsymbol{X}}_1, \widehat{\boldsymbol{X}}_2) = (\boldsymbol{X}_1, \boldsymbol{X}_2)$ holds. Hence the decoding error probability is given by

$$\begin{aligned}&\Pr[\Psi^{(n)}(\boldsymbol{K}_1, \boldsymbol{K}_2, \phi_1^{(n)}(\boldsymbol{K}_1, \boldsymbol{X}_1), \phi_2^{(n)}(\boldsymbol{K}_2, \boldsymbol{X}_2))\\ &\quad \neq (\boldsymbol{X}_1, \boldsymbol{X}_2)]\\ &= \Pr[\Psi^{(n)}_{\boldsymbol{K}_1,\boldsymbol{K}_2}(\Phi^{(n)}_{1,\boldsymbol{K}_1}(\boldsymbol{X}_1), \Phi^{(n)}_{2,\boldsymbol{K}_2}(\boldsymbol{X}_2)) \neq (\boldsymbol{X}_1, \boldsymbol{X}_2)]\\ &= \Pr[\psi^{(n)}(\phi_1^{(n)}(\boldsymbol{X}_1), \phi_2^{(n)}(\boldsymbol{X}_2)) \neq (\boldsymbol{X}_1, \boldsymbol{X}_2)]\\ &= \Pr[(\boldsymbol{X}_1, \boldsymbol{X}_2) \notin \mathcal{D}^{(n)}].\end{aligned}$$

Since the above quantity depends only on $(\phi_1^{(n)}, \phi_2^{(n)}, \psi^{(n)})$, we write the error probability p_{e} of decoding as

$$\begin{aligned}p_{\mathrm{e}} =& p_{\mathrm{e}}(\phi_1^{(n)}, \phi_2^{(n)}, \psi^{(n)}|p^n_{X_1X_2})\\ :=& \Pr[(\boldsymbol{X}_1, \boldsymbol{X}_2) \notin \mathcal{D}^{(n)})].\end{aligned}$$

Definition 1 (Reliable and Secure Rate Pair): We fix some positive constant δ_0. For a fixed pair $(\varepsilon, \delta) \in (0, 1) \times [0, \delta_0]$, (R_1, R_2) is said to be an (ε, δ)-*reliable and secure rate pair* if there exists a sequence $\{(\Phi_1^{(n)}, \Phi_2^{(n)}, \Psi^{(n)})\}_{n\geq1}$ such that $\forall\gamma > 0$, $\exists n_0 = n_0(\gamma) \in \mathbb{N}$, $\forall n \geq n_0$, we have

$$\begin{aligned}&\frac{1}{n}\log|\mathcal{C}_i^{(n)}| \leq R_i + \gamma,\ i = 1, 2,\\ &p_{\mathrm{e}}(\phi_1^{(n)}, \phi_2^{(n)}, \psi^{(n)}|p^n_{X_1X_2}) \leq \varepsilon,\\ &I(C_1^{(n)}C_2^{(n)}; \boldsymbol{X}_1\boldsymbol{X}_2) \leq \delta.\end{aligned}$$

Definition 2 (Reliable and Secure Rate Region): Let $\mathcal{R}^*(\varepsilon, \delta|p_{X_1X_2},\ p_{K_1K_2})$ denote the set of all (R_1, R_2) such that $(R_1,\ R_2)$ is an (ε, δ)-reliable and secure rate pair. We call $\mathcal{R}^*(\varepsilon, \delta|p_{X_1X_2},\ p_{K_1K_2})$ *the* (ε, δ)-*reliable and secure rate region*. Furthermore, set

$$\mathcal{R}^*(p_{X_1X_1}, p_{K_1K_2}) := \bigcap_{\substack{(\varepsilon,\delta)\in(0,\delta_0]\\ \times(0,1)}} \mathcal{R}^*(\varepsilon, \delta|p_{X_1X_2}, p_{K_1K_2}).$$

We call $\mathcal{R}^*(p_{X_1X_2}, p_{K_1K_2})$ the *reliable and secure rate region*.

III. Main Results

In this section we state our main results. We first derive an explicit inner bound of $\mathcal{R}^*(p_{X_1X_2}, p_{K_1K_2})$. This inner bound can easily be obtained by the previous works [2], [3]. We next derive an explicit outer bound of $\mathcal{R}^*(\varepsilon, \delta|p_{X_1X_2}, p_{K_1K_2})$ for $(\varepsilon, \delta) \in (0, 1) \times [0, \delta_0]$. This outer bound does not depend on $(\varepsilon, \delta) \in (0, 1) \times [0, \delta_0]$ and coincides with the inner bound under some assumption on $p_{X_1X_2}$ and $p_{K_1K_2}$. This implies that we have the strong converse theorem under this assumption. In the general case without the above assumption on $p_{X_1X_2}$ and $p_{K_1K_2}$, we show that the outer bound is partially tight.

A. Inner Bound for the Distributed Source Encryption

In this subsection we derive an inner bound of $\mathcal{R}^*(\varepsilon,\delta|p_{X_1X_2},p_{K_1K_2})$ for $(\varepsilon,\delta)\in(0,1)\times[0,\delta_0]$. Define the following two regions:

$$\begin{aligned}\mathcal{R}_{\rm sw}(p_{X_1X_2}) &:= \{(R_1,R_2): R_1\ge H(X_1|X_2),\\ &\qquad R_2\ge H(X_2|X_1),\\ &\qquad R_1+R_2\ge H(X_1X_2)\},\\ \mathcal{R}_{\rm key}(p_{K_1K_2}) &:= \{(R_1,R_2): R_1\le H(K_1), R_2\le H(K_2),\\ &\qquad R_1+R_2\le H(K_1K_2)\}.\end{aligned}$$

Furthermore, we set

$$\begin{aligned}\mathcal{R}(p_{X_1X_2},p_{K_1K_2}) &:= \{(R_1,R_2): R_i\ge \widetilde{R}_i, i=1,2,\\ &\text{for some } (\widetilde{R}_1,\widetilde{R}_2)\in\mathcal{R}_{\rm key}(p_{K_1K_2})\cap\mathcal{R}_{\rm sw}(p_{X_1X_2})\}.\end{aligned}$$

According to the previous works [2], [3], the bound $\mathcal{R}^*_{\rm key}(p_{K_1K_2})\cap\mathcal{R}_{\rm sw}(p_{X_1X_2})$ serves as an inner bound of $\mathcal{R}^*(p_{X_1X_2},\,p_{K_1K_2})$ in the case where the security criterion is measured by the mutual information $\Delta^{(n)}_{\rm MI}$. By a simple observation we can see that if $(\widetilde{R}_1,\widetilde{R}_2)$ belongs to $\mathcal{R}^*(p_{X_1X_2},p_{K_1K_2})$, then every (R_1,R_2) satisfying $R_i\ge\widetilde{R}_i, i=1,2$, also belongs to $\mathcal{R}^*(p_{X_1X_2},\,p_{K_1K_2})$. Hence we have the following theorem:

Theorem 1: For each $(\varepsilon,\delta)\in(0,1)\times(0,\delta_0]$, we have

$$\begin{aligned}&\mathcal{R}(p_{X_1X_2},p_{K_1K_2})\subseteq\mathcal{R}^*(p_{X_1X_2},p_{K_1K_2})\\ &\subseteq\mathcal{R}^*(\varepsilon,\delta|p_{X_1X_2},p_{K_1K_2}).\end{aligned}\tag{4}$$

For $\mathcal{R}(p_{X_1X_2},\,p_{K_1K_2})$, we have several properties. To describe those we define the following two sets:

$$\begin{aligned}&\mathcal{S}(p_{X_1X_2},p_{K_1K_2}) := \mathcal{R}(p_{X_1X_2},p_{K_1K_2})\\ &\cap\{(R_1,R_2): R_1+R_2=H(X_1X_2)\},\\ &\mathcal{S}_{\rm sw}(p_{X_1X_2}) := \mathcal{R}_{\rm sw}(p_{X_1X_2})\\ &\cap\{(R_1,R_2): R_1+R_2=H(X_1X_2)\}.\end{aligned}$$

A relation between $\mathcal{S}_{\rm sw}(p_{X_1X_2})$ and $\mathcal{S}(p_{X_1X_2},p_{K_1K_2})$ is

$$\mathcal{S}(p_{X_1X_2},p_{K_1K_2})=\mathcal{S}_{\rm sw}(p_{X_1X_2})\cap\mathcal{R}_{\rm key}(p_{K_1K_2}).$$

For $\mathcal{R}(p_{X_1X_2},\,p_{K_1K_2})$, we have the following property:

Property 2:

a) The region $\mathcal{R}(p_{X_1X_2},\,p_{K_1K_2})$ is not void if and only if $\mathcal{R}_{\rm key}(p_{K_1K_2})\cap\mathcal{R}_{\rm sw}(p_{X_1X_2})\neq\emptyset$, which is equivalent to the following condition:

$$\left.\begin{aligned}H(X_i|X_{3-i})\le H(K_i), i=1,2,\\ H(X_1X_2)\le H(K_1K_2).\end{aligned}\right\}\tag{5}$$

b) The region $\mathcal{R}(p_{X_1X_2},p_{K_1K_2})$ has an expression using $\mathcal{S}(p_{X_1X_2},p_{K_1K_2})$. This expression is shown below:

$$\begin{aligned}\mathcal{R}(p_{X_1X_2},p_{K_1K_2}) &= \{(R_1,R_2): R_i\ge\widetilde{R}_i, i=1,2,\\ &\text{for some } (\widetilde{R}_1,\widetilde{R}_2)\in\mathcal{S}(p_{X_1X_2},p_{K_1K_2}).\end{aligned}$$

c) The region $\mathcal{R}(p_{X_1X_2},p_{K_1K_2})$ coincides with the region $\mathcal{R}_{\rm sw}(p_{X_1X_2})$ if and only if

$$H(X_i)\le H(K_i), i=1,2,\ H(X_1X_2)\le H(K_1K_2).$$

Proof of Property 2 is easy. We omit the detail.

B. Strong Converse for the Distributed Source Encryption

In this subsection we derive outer bounds of $\mathcal{R}^*(\varepsilon,\delta|p_{X_1X_2},p_{K_1K_2})$ for $(\varepsilon,\delta)\in(0,1)\times[0,\delta_0]$. We first derive one outer bound by a simple observation based on previous works on the distributed source coding for correlated sources. From the communication scheme we can see that the common key cryptosystem can be regarded as the data compression system, where for each $i=1,2$, the encoder $\Phi^{(n)}_i$ and the decoder $\Psi^{(n)}$ can use the common side information $\boldsymbol{K}_i$. By the strong converse coding theorem for this data compression system [11], we have that if

$$\begin{aligned}&R_1<H(X_1|X_2K_1K_2)=H(X_1|X_2)\text{ or}\\ &R_2<H(X_2|X_1K_1K_2)=H(X_2|X_1)\text{ or}\\ &R_1+R_2<H(X_1X_2|K_1K_2)=H(X_1X_2)\end{aligned}$$

then $\forall\tau\in(0,1)$, $\forall\gamma>0$, and $\forall\{(\phi^{(n)}_1,\phi^{(n)}_2,\psi^{(n)})\}_{n\ge1}$, $\exists n_0=n_0(\tau,\gamma)\in\mathbb{N}$, $\forall n\ge n_0$, we have the following:

$$\begin{aligned}&\frac{m}{n}\log|\mathcal{X}_i|\le R_i+\gamma, i=1,2,\\ &p_{\rm e}(\phi^{(n)}_1,\phi^{(n)}_2,\psi^{(n)}|p^n_{X_1X_2})\ge1-\tau.\end{aligned}$$

Hence we have the following theorem.

Theorem 2: For each $(\varepsilon,\delta)\in(0,1)\times(0,\delta_0]$, we have

$$\mathcal{R}^*(\varepsilon,\delta|p_{X_1X_2},p_{K_1K_2})\subseteq\mathcal{R}_{\rm sw}(p_{X_1X_2}).$$

For the derivations of outer bounds we consider the following two cases:

Case 1: $H(X_i)\le H(K_i)$ for $i=1,2$.
Case 2: $H(X_1)\ge H(K_1)$ or $H(X_2)\ge H(K_2)$.

<u>*Case 1:*</u> We consider the case where $H(X_i)\le H(K_i)$ for $i=1,2$. We define a region serving as an outer bound of $\mathcal{R}^*(\varepsilon,\delta|p_{X_1X_2},p_{K_1K_2})$ for $(\varepsilon,\delta)\in(0,1)\times[0,\delta_0]$. Set

$$\begin{aligned}&\mathcal{R}^{(\rm out)}(p_{X_1X_2},p_{X_1X_2})\\ &:=\begin{cases}\mathcal{R}_{\rm sw}(p_{X_1X_2}) & \text{if } \mathcal{R}_{\rm key}(p_{K_1K_2})\cap\mathcal{R}_{\rm sw}(p_{X_1X_2})\neq\emptyset,\\ \emptyset & \text{othrewise.}\end{cases}\end{aligned}$$

Our main result is the following:

Theorem 3: For $(\varepsilon,\delta)\in(0,1)\times[0,\delta_0]$,

$$\mathcal{R}^*(\varepsilon,\delta|p_{X_1X_2},p_{K_1K_2})\subseteq\mathcal{R}^{(\rm out)}(p_{X_1X_2},p_{K_1K_2}).$$

Proof of Theorem 3 is given in the next section. By Property 2 part c), we have that if $H(X_i)\le H(K_i), i=1,2$, $H(X_1X_2)\le H(K_1K_2)$, then $\mathcal{R}^{(\rm out)}(p_{X_1X_2},p_{K_1K_2})$ coincides with $\mathcal{R}(p_{X_1X_2},\,p_{K_1K_2})$ serving as an inner bound of $\mathcal{R}^*(p_{X_1X_2},p_{K_1K_2})$. According to Property 2 part a), the condition $H(X_1X_2)\le H(K_1K_2)$ is included in the condition of $\mathcal{R}_{\rm key}(p_{K_1K_2})\cap\mathcal{R}_{\rm sw}(p_{X_1X_2})\neq\emptyset$. Hence the condition

for $\mathcal{R}^{(\mathrm{out})}(p_{X_1X_2}, p_{K_1K_2})$ and $\mathcal{R}(\ p_{X_1X_2}, p_{K_1K_2})$ to match is given by $H(X_i) \le H(K_i), i = 1, 2$. Summarizing the above argument we have the following corollary from Theorem 3.

Corollary 1: We assume that $H(X_i) \le H(K_i), i = 1, 2$. Then we have that for $(\varepsilon, \delta) \in (0, 1) \times [0, \delta_0]$,

$$\begin{aligned}&\mathcal{R}(p_{X_1X_2}, p_{K_1K_2}) = \mathcal{R}^*(p_{X_1X_2}, p_{K_1K_2})\\ &= \mathcal{R}^*(\varepsilon, \delta|p_{X_1X_2}, p_{K_1K_2}) = \mathcal{R}^{(\mathrm{out})}(p_{X_1X_2}, p_{K_1K_2}).\end{aligned}$$

The above equality implies that we have the strong converse theorem for the distributed source encryption.

<u>*Case 2:*</u> We consider the case where $H(X_1) \ge H(K_1)$ or $H(X_2) \ge H(K_2)$. In this case we prove that the inner bound $\mathcal{R}(p_{X_1X_2}, p_{K_1K_2})$ also serves as an outer bound of $\mathcal{R}^*(\varepsilon, \delta|p_{X_1X_2}, p_{K_1K_2})$ for $(\varepsilon, \delta) \in (0, 1) \times (0, \delta_0]$, there by establishing the strong converse theorem.

We first examine some particular parts of the regions $\mathcal{R}^*(\varepsilon, \delta|p_{X_1X_2}, p_{K_1K_2})$, for $(\varepsilon, \delta) \in (0, 1) \times (0, \delta_0]$ and $\mathcal{R}^*($ $p_{X_1X_2}, p_{K_1K_2})$. For $(\varepsilon, \delta) \in (0, 1) \times (0, \delta_0]$, set

$$\begin{aligned}&\mathcal{S}^*(\delta, \varepsilon|p_{X_1X_2}, p_{K_1K_2}) := \mathcal{R}^*(\varepsilon, \delta|p_{X_1X_2}, p_{K_1K_2})\\ &\cap \{(R_1, R_2) : R_1 + R_2 = H(X_1X_2)\}.\end{aligned}$$

Furthermore, set

$$\begin{aligned}&\mathcal{S}^*(p_{X_1X_2}, p_{K_1K_2}) := \mathcal{R}^*(p_{X_1X_2}, p_{K_1K_2})\\ &\cap \{(R_1, R_2) : R_1 + R_2 = H(X_1X_2)\}.\end{aligned}$$

By Theorems 1 and 3, we have that for $(\varepsilon, \delta) \in (0, 1) \times (0, \delta_0]$,

$$\begin{aligned}&\mathcal{S}(p_{X_1X_2}, p_{K_1K_2}) = \mathcal{S}_{\mathrm{sw}}(p_{X_1X_2}) \cap \mathcal{R}_{\mathrm{key}}(p_{K_1K_2})\\ &\subseteq \mathcal{S}^*(p_{X_1X_2}, p_{K_1K_2}) \subseteq \mathcal{S}^*(\delta, \varepsilon|p_{X_1X_2}, p_{K_1K_2})\\ &\subseteq \mathcal{S}_{\mathrm{sw}}(p_{X_1X_2}).\end{aligned} \tag{6}$$

We can show that the set $\mathcal{S}(p_{X_1X_2}, p_{K_1K_2})$ serving as an inner bound of the secure and reliable rate set $\mathcal{S}^*(p_{X_1X_2}, p_{K_1K_2})$ in (6) also serves as an outer bound of the (ε, δ)-rate set $\mathcal{S}^*(\delta, \varepsilon|p_{X_1X_2}, p_{K_1K_2})$ for $(\varepsilon, \delta) \in (0, 1) \times [0, \delta_0]$. This result is presented in the following theorem.

Theorem 4: For $(\varepsilon, \delta) \in (0, 1) \times [0, \delta_0]$,

$$\begin{aligned}&\mathcal{S}(p_{X_1X_2}, p_{K_1K_2}) = \mathcal{S}_{\mathrm{sw}}(p_{X_1X_2}) \cap \mathcal{R}_{\mathrm{key}}(p_{K_1K_2})\\ &= \mathcal{S}^*(p_{X_1X_2}, p_{K_1K_2}) = \mathcal{S}^*(\varepsilon, \delta|p_{X_1X_2}, p_{K_1K_2}).\end{aligned}$$

The above equality implies that we have the strong converse theorem for transmission rate pair (R_1, R_2) belonging to $\mathcal{S}_{\mathrm{sw}}(p_{X_1X_2}) \cap \mathcal{R}_{\mathrm{key}}(p_{K_1K_2})$, which serves as a boundary of $\mathcal{R}^*(\varepsilon, \delta|p_{X_1X_2}, p_{K_1K_2})$ for $(\varepsilon, \delta) \in (0, 1) \times [0, \delta_0]$.

On $\mathcal{R}^*(\varepsilon, \delta|p_{X_1X_2}, p_{K_1K_2})$, we conjecture the following:

Conjecture: We assume that for each $(\varepsilon, \delta) \in (0, 1) \times [0, \delta_0]$, $(R_1, R_2) \in \mathcal{R}^*(\varepsilon, \delta|p_{X_1X_2}, p_{K_1K_2})$. Then $\exists \tilde{R}_i \le R_i, i = 1, 2$ and $\exists \widetilde{\varepsilon} \in [\varepsilon, 1)$ such that $(\widetilde{R}_1, \widetilde{R}_2) \in \mathcal{S}^*(\widetilde{\varepsilon}, \delta|p_{X_1X_2}, p_{K_1K_2})$.

This conjecture together with Theorem 4 and Property 2 part b) yields that $\mathcal{R}(p_{X_1X_2}, p_{K_1K_2})$ serves as an outer bound of $\mathcal{R}^*(\varepsilon, \delta|p_{X_1X_2}, p_{K_1K_2})$, thereby establishing the following strong converse theorem:

$$\begin{aligned}&\mathcal{R}(p_{X_1X_2}, p_{K_1K_2}) = \mathcal{R}^*(p_{X_1X_2}, p_{K_1K_2})\\ &= \mathcal{R}^*(\varepsilon, \delta|p_{X_1X_2}, p_{K_1K_2}) \text{ for } (\varepsilon, \delta) \in (0, 1) \times [0, \delta_0].\end{aligned}$$

We strongly believe that this conjecture is true. However, at present we do not have succeeded in establishing this. To prove the conjecture is one of our important future works.

IV. Proofs of Theorems 3 and 4

In this section we prove Theorems 3 and 4. To prove Theorems 3 and 4, we present two propositions. To describe those two propositions, we give several definitions. Define two subsets of $\mathcal{X}_1^n \times \mathcal{X}_2^n$ by

$$\begin{aligned}\widetilde{\mathcal{A}}_\gamma^{(n)} :=&\Bigg\{(\boldsymbol{x}_1, \boldsymbol{x}_2) : \left|\frac{1}{n}\log\frac{1}{p^n_{X_i|X_{3-i}}(\boldsymbol{x}_i|\boldsymbol{x}_{3-i})}\right.\\ &\left. - H(X_i|X_{3-i})\right| \le \gamma,\ i = 1, 2,\\ &\left|\frac{1}{n}\log\frac{1}{p^n_{X_1X_2}(\boldsymbol{x}_1, \boldsymbol{x}_2)} - H(X_1X_2)\right| \le \gamma\Bigg\},\\ \widetilde{\mathcal{D}}_\gamma^{(n)} :=& \widetilde{\mathcal{A}}_\gamma^{(n)} \cap \mathcal{D}^{(n)}.\end{aligned}$$

Set

$$\nu_n(\gamma) := p^n_{X_1X_2}\left(\left(\widetilde{\mathcal{A}}_\gamma^{(n)}\right)^c\right),\ \nu_n(\gamma, \varepsilon) := \nu_n(\gamma) + \varepsilon.$$

By the large deviation theory, we have that for fixed $\gamma > 0$, $\nu_n(\gamma)$ decays exponentially as $n \to \infty$. On $\widetilde{\mathcal{D}}_\gamma^{(n)}$, we have the following bound:

$$\begin{aligned}&p^n_{X_1X_2}\left(\left(\widetilde{\mathcal{D}}_\gamma^{(n)}\right)^c\right)\\ &\le p^n_{X_1X_2}\left(\left(\widetilde{\mathcal{A}}_\gamma^{(n)}\right)^c\right) + p^n_{X_1X_2}\left(\left(\mathcal{D}^{(n)}\right)^c\right) \le \nu_n(\gamma, \varepsilon).\end{aligned}$$

We set

$$\zeta_n(\gamma, \varepsilon, \delta) := \frac{1}{n}\left[\frac{\delta}{1 - \nu_n(\gamma, \varepsilon)} + \log\frac{1}{1 - \nu_n(\gamma, \varepsilon)}\right].$$

We have the following two propositions, which are key results to prove Theorems 3 and 4.

Proposition 1: Fix any $(\varepsilon, \delta) \in (0, 1) \times (0, \delta_0]$. Suppose that $\mathcal{R}^*(\varepsilon, \delta|p_{X_1X_2}, p_{K_1K_2}) \ne \emptyset$. Then we must have that $\forall \gamma > 0$, $\exists n_0 = n_0(\gamma) \in \mathbb{N}$, $\forall n \ge n_0$,

$$\begin{aligned}H(X_i|X_{3-i}) \le& H(K_i) + \gamma + \zeta_n(\gamma, \varepsilon, \delta),\ i = 1, 2,\\ H(X_1X_2) \le& H(K_1K_2) + \gamma + \zeta_n(\gamma, \varepsilon, \delta).\end{aligned}$$

Proposition 2: Fix any $(\varepsilon, \delta) \in (0, 1) \times (0, \delta_0]$. Suppose that $(R_1, R_2) \in \mathcal{S}^*(\varepsilon, \delta|p_{X_1X_2}, p_{K_1K_2})$. Then we must have that $\forall \gamma > 0$, $\exists n_0 = n_0(\gamma) \in \mathbb{N}$, $\forall n \ge n_0$,

$$R_i \le H(K_i) + 2\gamma + \zeta_n(\gamma, \varepsilon, \delta),\ i = 1, 2.$$

Proofs of Propositions 1 and 2 are given in Section V. Theorem 3 immediately follows from Proposition 1. Theorem 4 immediately follows from Proposition 2.

Proof of Theorem 3: By Proposition 1, we have that if $\mathcal{R}^*(\varepsilon, \delta|p_{X_1X_2}, p_{K_1K_2}) \ne \emptyset$, then $\forall \gamma > 0$, $\exists n_0 = n_0(\gamma) \in \mathbb{N}$, $\forall n \ge n_0$,

$$H(X_i|X_{3-i}) \le H(K_i) + \gamma + \zeta_n(\gamma, \varepsilon, \delta),\ i = 1, 2, \tag{7}$$

$$H(X_1X_2) \le H(K_1K_2) + \gamma + \zeta_n(\gamma, \varepsilon, \delta). \tag{8}$$

By letting $n \to \infty$ in (7) and (8) and considering that $\gamma > 0$ can be taken arbitrary small, we have that

$$\left.\begin{aligned} H(X_i|X_{3-i}) \le H(K_i), i=1,2, \\ H(X_1X_2) \le H(K_1K_2). \end{aligned}\right\} \tag{9}$$

According to Property 2, the condition (9) is equivalent to the condition $\mathcal{R}(p_{X_1X_2},\, p_{K_1K_2}) \neq \emptyset$. Furthermore, by Theorem 2, we have that $\mathcal{R}_{\mathrm{sw}}(p_{X_1X_2})$ serves as an outer bound of $\mathcal{R}^*(\varepsilon,\delta|p_{X_1X_2},\, p_{K_1K_2})$ for $(\varepsilon,\delta) \in (0,1)\times[0,\delta_0]$. Those imply that $\mathcal{R}^{(\mathrm{out})}(p_{X_1X_2}, p_{K_1K_2})$ serves as an outer bound of $\mathcal{R}^*(\varepsilon,\delta|p_{X_1X_2},\, p_{K_1K_2})$ for $(\varepsilon,\delta) \in (0,1)\times[0,\delta_0]$. ■

Proof of Theorem 4: By Proposition 2, we have that if $(R_1,R_2) \in \mathcal{S}^*(\varepsilon,\delta|p_{X_1X_2},p_{K_1K_2})$, then $\forall\gamma > 0$, $\exists n_0 = n_0(\gamma) \in \mathbb{N}$, $\forall n \ge n_0$,

$$R_i \le H(K_i) + 2\gamma + \zeta_n(\gamma,\varepsilon,\delta),\ i=1,2. \tag{10}$$

Letting $n \to \infty$ in (10) and considering that $\gamma > 0$ can be taken arbitrary small, we have that $R_i \le H(K_i), i=1,2$. This implies that we must have $(R_1,R_2) \in \mathcal{S}(p_{X_1X_2},p_{K_1K_2})$. ■

V. Proofs of Propositions 1 and 2

In this section we prove Propositions 1 and 2 we presented in Section IV. For the proof of those two propositions we need several lemmas. We present those lemmas and prove them in Section V-B. Proofs of two propositions are given in Section V-C.

A. Several Preliminaries on Random Variables

In this subsection we present several preliminary results on random variables necessary for the proof of Propositions 1 and 2.

Define the random pair $(\widetilde{\boldsymbol{X}}_1,\widetilde{\boldsymbol{X}}_2) \in \widetilde{\mathcal{D}}_\gamma^{(n)}$ by

$$p_{\widetilde{\boldsymbol{X}}_1\widetilde{\boldsymbol{X}}_2}(\boldsymbol{x}_1,\boldsymbol{x}_2) = \begin{cases} \dfrac{p^n_{X_1X_2}(\boldsymbol{x}_1,\boldsymbol{x}_2)}{p^n_{X_1X_2}\left(\widetilde{\mathcal{D}}_\gamma^{(n)}\right)} & \text{if } (\boldsymbol{x}_1,\boldsymbol{x}_2) \in \widetilde{\mathcal{D}}_\gamma^{(n)}, \\ 0 & \text{otherwise.} \end{cases}$$

For each $i=1,2$, let $\widetilde{C}_i^{(n)}$ be a random variable induced by $\Phi_i^{(n)}, \widetilde{\boldsymbol{X}}_i$, and $\boldsymbol{K}_i$ in the following way:

$$\begin{aligned} \widetilde{C}_i^{(n)} :=& \Phi_i^{(n)}\left(\boldsymbol{K}_i, \widetilde{\boldsymbol{X}}_i\right) \\ =& \Phi_{i,\boldsymbol{K}_i}^{(n)}\left(\widetilde{\boldsymbol{X}}_i\right) = \Phi_{i,\widetilde{\boldsymbol{X}}_i}^{(n)}\left(\boldsymbol{K}_i\right). \end{aligned} \tag{11}$$

Set

$$\begin{aligned} \mathcal{C}^{(n)}_{(\Phi_1^{(n)},\Phi_2^{(n)})(\widetilde{\mathcal{D}}_\gamma^{(n)})} :=& \{(c_1,c_2) : c_i = \Phi_{i,\boldsymbol{k}_i}^{(n)}(\boldsymbol{x}_i), i=1,2 \\ & \text{for some } (\boldsymbol{k}_1,\boldsymbol{k}_2) \in \mathcal{X}_1^n \times \mathcal{X}_2^n \\ & \text{and } (\boldsymbol{x}_1,\boldsymbol{x}_2) \in \widetilde{\mathcal{D}}_\gamma^{(n)}\}. \end{aligned}$$

Fix any $(\boldsymbol{k}_1,\boldsymbol{k}_2) \in \mathcal{X}_1^n \times \mathcal{X}_2^n$. Set

$$\begin{aligned} \mathcal{C}^{(n)}_{(\Phi_{1,\boldsymbol{k}_1}^{(n)},\Phi_{2,\boldsymbol{k}_2}^{(n)})(\widetilde{\mathcal{D}}_\gamma^{(n)})} :=& \{(c_1,c_2) : c_i = \Phi_{i,\boldsymbol{k}_i}^{(n)}(\boldsymbol{x}_i), i=1,2 \\ & \text{for some } (\boldsymbol{x}_1,\boldsymbol{x}_2) \in \widetilde{\mathcal{D}}_\gamma^{(n)}\}. \end{aligned}$$

We have the following property.

Property 3: For each $(c_1,c_2,\boldsymbol{x}_1,\boldsymbol{x}_2) \in \mathcal{C}^{(n)}_{(\Phi_1^{(n)},\Phi_2^{(n)})(\widetilde{\mathcal{D}}_\gamma^{(n)})} \times \widetilde{\mathcal{D}}_\gamma^{(n)}$,

$$\begin{aligned} & p_{\widetilde{C}_1^{(n)}\widetilde{C}_2^{(n)}\widetilde{\boldsymbol{X}}_1\widetilde{\boldsymbol{X}}_2}(c_1,c_2,\boldsymbol{x}_1,\boldsymbol{x}_2) \\ &= \Pr\Big\{(\widetilde{C}_1^{(n)},\widetilde{C}_2^{(n)},\widetilde{\boldsymbol{X}}_1,\widetilde{\boldsymbol{X}}_2) = (c_1,c_2,\boldsymbol{x}_1,\boldsymbol{x}_2) \\ &= \Pr\Big\{(C_1^{(n)},C_2^{(n)},\boldsymbol{X}_1,\boldsymbol{X}_2) = (c_1,c_2,\boldsymbol{x}_1,\boldsymbol{x}_2) \\ & \qquad \Big|(\boldsymbol{X}_1,\boldsymbol{X}_2) \in \widetilde{\mathcal{D}}_\gamma^{(n)}\Big\}. \end{aligned}$$

Proof of this property is given in Appendix C. Property 3 is closely related to the proofs of Propositions 1 and 2.

The following joint or conditional distributions are important for later arguments.

$$\begin{aligned} & p_{\widetilde{C}_i^{(n)}\widetilde{\boldsymbol{X}}_{3-i}}(c_i,\boldsymbol{x}_{3-i}) = \Pr\Big\{(C_i^{(n)},\boldsymbol{X}_{3-i}) = (c_i,\boldsymbol{x}_{3-i}) \\ & \qquad \Big|(\boldsymbol{X}_1,\boldsymbol{X}_2) \in \widetilde{\mathcal{D}}_\gamma^{(n)}\Big\}, \\ & p_{\widetilde{C}_i^{(n)}|\widetilde{\boldsymbol{X}}_{3-i}}(c_i|\boldsymbol{x}_{3-i}) = \Pr\Big\{C_i^{(n)} = c_i \\ & \qquad \Big|\boldsymbol{X}_{3-i} = \boldsymbol{x}_{3-i}, (\boldsymbol{X}_1,\boldsymbol{X}_2) \in \widetilde{\mathcal{D}}_\gamma^{(n)}\Big\}, i=1,2, \\ & p_{\widetilde{C}_1^{(n)}\widetilde{C}_2^{(n)}|\widetilde{\boldsymbol{X}}_1\widetilde{\boldsymbol{X}}_2}(c_1,c_2|\boldsymbol{x}_1,\boldsymbol{x}_2) = \Pr\Big\{(C_1^{(n)},C_2^{(n)}) = (c_1,c_2) \\ & \qquad \Big|(\boldsymbol{X}_1,\boldsymbol{X}_2) = (\boldsymbol{x}_1,\boldsymbol{x}_2), (\boldsymbol{X}_1,\boldsymbol{X}_2) \in \widetilde{\mathcal{D}}_\gamma^{(n)}\Big\}. \end{aligned}$$

B. Several Lemmas Necessary for the Proofs of Propositions 1 and 2

In this subsection we present several lemmas necessary for the proof of Propositions 1 and 2. We further prove those lemmas. We first present several definitions. For each $i=1,2$, we set

$$(\widetilde{\mathcal{D}}_\gamma^{(n)})_i := \{\boldsymbol{x}_i : (\boldsymbol{x}_1,\boldsymbol{x}_2) \in \widetilde{\mathcal{D}}_\gamma^{(n)} \text{ for some } \boldsymbol{x}_{3-i}\}. \tag{12}$$

For each $i=1,2$ and each $\boldsymbol{x}_i \in (\widetilde{\mathcal{D}}_\gamma^{(n)})_i$, we set

$$\widetilde{\mathcal{D}}^{(n)}_{i|3-i,\gamma}(\boldsymbol{x}_i|\boldsymbol{x}_{3-i}) := \{\boldsymbol{x}_i : (\boldsymbol{x}_1,\boldsymbol{x}_2) \in \widetilde{\mathcal{D}}_\gamma^{(n)}\}.$$

Set

$$\begin{aligned} Q_{12} :=& p^n_{X_1X_2}\left(\widetilde{\mathcal{D}}_\gamma^{(n)}\right) = \Pr\left\{(\boldsymbol{X}_1,\boldsymbol{X}_2) \in \widetilde{\mathcal{D}}_\gamma^{(n)}\right\} \\ =& \sum_{(\boldsymbol{x}_1,\boldsymbol{x}_2)\in\widetilde{\mathcal{D}}_\gamma^{(n)}} p_{\boldsymbol{X}_1\boldsymbol{X}_2}(\boldsymbol{x}_1,\boldsymbol{x}_2). \end{aligned}$$

For each $i=1,2$, set

$$Q_i := \Pr\left\{\boldsymbol{X}_i \in \left(\widetilde{\mathcal{D}}_\gamma^{(n)}\right)_i\right\} = \sum_{\boldsymbol{x}_i\in\left(\widetilde{\mathcal{D}}_\gamma^{(n)}\right)_i} p_{\boldsymbol{X}_i}(\boldsymbol{x}_i).$$

For each $i=1,2$ and $\boldsymbol{x}_{3-i} \in \left(\widetilde{\mathcal{D}}_\gamma^{(n)}\right)_{3-i}$, set

$$\begin{aligned} & Q_{i|3-i}(\boldsymbol{x}_{3-i}) \\ & := \Pr\left\{\boldsymbol{X}_i \in \widetilde{\mathcal{D}}^{(n)}_{i|3-i,\gamma}(\boldsymbol{x}_{3-i}) \middle| \boldsymbol{X}_{3-i} = \boldsymbol{x}_{3-i}\right\} \\ & = \sum_{\boldsymbol{x}_i\in\widetilde{\mathcal{D}}^{(n)}_{i|3-i,\gamma}(\boldsymbol{x}_{3-i})} p_{\boldsymbol{X}_1|\boldsymbol{X}_2}(\boldsymbol{x}_i|\boldsymbol{x}_{3-i}). \end{aligned}$$

For each $i=1,2$ and for any $(c_1,c_2)\in\mathcal{C}_1^{(n)}\times\mathcal{C}_2^{(n)}$ and any $\boldsymbol{x}_{3-i}\in\left(\widetilde{\mathcal{D}}_\gamma^{(n)}\right)_{3-i}$, we have the followings:

$$p_{\widetilde{C}_i^{(n)}|\widetilde{\boldsymbol{X}}_{3-i}}(c_i|\boldsymbol{x}_{3-i})=[Q_{i|3-i}(\boldsymbol{x}_{3-i})]^{-1}\sum_{\boldsymbol{x}_i\in\widetilde{\mathcal{D}}_\gamma^{(n)}(\boldsymbol{x}_{3-i})}1$$
$$\times p_{C_i^{(n)}|\boldsymbol{X}_i\boldsymbol{X}_{3-i}}(c_i|\boldsymbol{x}_1,\boldsymbol{x}_2)p_{\boldsymbol{X}_i|\boldsymbol{X}_{3-i}}(\boldsymbol{x}_i|\boldsymbol{x}_{3-i}), \tag{13}$$
$$p_{\widetilde{\boldsymbol{X}}_{3-i}}(\boldsymbol{x}_{3-i})=\frac{Q_{i|3-i}(\boldsymbol{x}_{3-i})p_{\boldsymbol{X}_{3-i}}(\boldsymbol{x}_{3-i})}{\sum_{\boldsymbol{x}_2\in\left(\widetilde{\mathcal{D}}_\gamma^{(n)}\right)_2}Q_{i|3-i}(\boldsymbol{x}_{3-i})p_{\boldsymbol{X}_{3-i}}(\boldsymbol{x}_{3-i})}, \tag{14}$$
$$p_{\widetilde{C}_1^{(n)}\widetilde{C}_2^{(n)}}(c_1,c_2)=[Q_{12}]^{-1}\sum_{(\boldsymbol{x}_1,\boldsymbol{x}_2)\in\widetilde{\mathcal{D}}_\gamma^{(n)}}1$$
$$\times p_{C_1^{(n)}C_2^{(n)}|\boldsymbol{X}_1\boldsymbol{X}_2}(c_1,c_2|\boldsymbol{x}_1,\boldsymbol{x}_2)p_{\boldsymbol{X}_1\boldsymbol{X}_2}(\boldsymbol{x}_1,\boldsymbol{x}_2). \tag{15}$$

For the conditional distributions $p_{\widetilde{C}_i^{(n)}|\widetilde{\boldsymbol{X}}_{3-i}}, i=1,2$ and the distribution $p_{\widetilde{C}_1^{(n)}\widetilde{C}_2^{(n)}}(c_1,c_2)$, we have the following lemma.

Lemma 2: For any $(c_1,c_2)\in\mathcal{C}_1^{(n)}\times\mathcal{C}_2^{(n)}$ and any $\boldsymbol{x}_{3-i}\in\left(\widetilde{\mathcal{D}}_\gamma^{(n)}\right)_{3-i}$, we have

$$p_{\widetilde{C}_i^{(n)}|\widetilde{\boldsymbol{X}}_{3-i}}(c_i|\boldsymbol{x}_{3-i})\le\left[Q_{i|3-i}(\boldsymbol{x}_{3-i})\right]^{-1}2^{-n[H(X_i|X_{3-i})-\gamma]}, i=1,2, \tag{16}$$
$$p_{\widetilde{C}_1^{(n)}\widetilde{C}_2^{(n)}}(c_1,c_2)\le[Q_{12}]^{-1}2^{-n[H(X_1X_2)-\gamma]}. \tag{17}$$

Proof: We first prove (16) for $i=1$. by the definition $\widetilde{\mathcal{D}}_\gamma^{(n)}=\widetilde{\mathcal{A}}_\gamma^{(n)}\cap\mathcal{D}^{(n)}$, we have

$$\widetilde{\mathcal{D}}_{1|2,\gamma}^{(n)}(\boldsymbol{x}_2)=\widetilde{\mathcal{A}}_{1|2,\gamma}^{(n)}(\boldsymbol{x}_2)\cap\mathcal{D}_{1|2}^{(n)}(\boldsymbol{x}_2),\ \forall\boldsymbol{x}_2\in\left(\widetilde{\mathcal{D}}_\gamma^{(n)}\right)_2,$$

implying that

$$p_{\boldsymbol{X}_1|\boldsymbol{X}_2}(\boldsymbol{x}_1|\boldsymbol{x}_2)\le 2^{-n[H(X_1|X_2)-\gamma]}\text{ for }\boldsymbol{x}_1\in\widetilde{\mathcal{D}}_{1|2,\gamma}^{(n)}(\boldsymbol{x}_2). \tag{18}$$

For each $(c_1.\boldsymbol{x}_2)\in\mathcal{C}_1^{(n)}\times\left(\widetilde{\mathcal{D}}_\gamma^{(n)}\right)_2$, we compute $p_{\widetilde{C}_1^{(n)}|\widetilde{\boldsymbol{X}}_2}(c_1|\boldsymbol{x}_2)Q_{1|2}((\boldsymbol{x}_2)$ to obtain as follows:

$$\begin{aligned}
&p_{\widetilde{C}_1^{(n)}|\widetilde{\boldsymbol{X}}_2}(c_1|\boldsymbol{x}_2)Q_{1|2}(\boldsymbol{x}_2)\\
&\overset{(a)}{=}\sum_{\boldsymbol{x}_1\in\widetilde{\mathcal{D}}_{1|2,\gamma}^{(n)}(\boldsymbol{x}_2)}p_{C_1^{(n)}|\boldsymbol{X}_1\boldsymbol{X}_2}(c_1|\boldsymbol{x}_1,\boldsymbol{x}_2)p_{\boldsymbol{X}_1|\boldsymbol{X}_2}(\boldsymbol{x}_1|\boldsymbol{x}_2)\\
&\overset{(b)}{\le}2^{-n[H(X_1|X_2)-\gamma]}\sum_{\boldsymbol{x}_1\in\mathcal{D}_{1|2}^{(n)}(\boldsymbol{x}_2)}p_{C_1^{(n)}|\boldsymbol{X}_1\boldsymbol{X}_2}(c_1|\boldsymbol{x}_1,\boldsymbol{x}_2)\\
&\overset{(c)}{\le}2^{-n[H(X_1|X_2)-\gamma]}.
\end{aligned}$$

Step (a) follows from (13). Step (b) follows from (18). Step (c) follows from Lemma 1. In a similar manner, we can prove (16) for $i=2$. We next prove (17). We first observe that By the definition $\widetilde{\mathcal{D}}_\gamma^{(n)}=\widetilde{\mathcal{A}}_\gamma^{(n)}\cap\mathcal{D}^{(n)}$, we have

$$p_{\boldsymbol{X}_1\boldsymbol{X}_2}(\boldsymbol{x}_1,\boldsymbol{x}_2)\le 2^{-n[H(X_1X_2)-\gamma]}\text{ for }(\boldsymbol{x}_1,\boldsymbol{x}_2)\in\widetilde{\mathcal{D}}_\gamma^{(n)}. \tag{19}$$

For each $(c_1.c_2)\in\mathcal{C}_1^{(n)}\times\mathcal{C}_2^{(n)}$, we compute $p_{\widetilde{C}_1^{(n)}\widetilde{C}_2^{(n)}}(c_1,c_2)$ Q_{12} to obtain as follows:

$$\begin{aligned}
&p_{\widetilde{C}_1^{(n)}\widetilde{C}_2^{(n)}}(c_1,c_2)Q_{12}\overset{(a)}{=}\sum_{(\boldsymbol{x}_1,\boldsymbol{x}_2)\in\widetilde{\mathcal{D}}_\gamma^{(n)}}1\\
&\quad\times p_{C_1^{(n)}C_2^{(n)}|\boldsymbol{X}_1\boldsymbol{X}_2}(c_1,c_2|\boldsymbol{x}_1,\boldsymbol{x}_2)p_{\boldsymbol{X}_1\boldsymbol{X}_2}(\boldsymbol{x}_1,\boldsymbol{x}_2).\\
&\overset{(b)}{\le}2^{-n[H(X_1X_2)-\gamma]}\sum_{(\boldsymbol{x}_1,\boldsymbol{x}_2)\in\mathcal{D}^{(n)}}1\\
&\quad\times p_{C_1^{(n)}C_2^{(n)}|\boldsymbol{X}_1\boldsymbol{X}_2}(c_1,c_2|\boldsymbol{x}_1,\boldsymbol{x}_2)\overset{(c)}{\le}2^{-n[H(X_1X_2)-\gamma]}.
\end{aligned}$$

Step (a) follows from (13). Step (b) follows from (19). Step (c) follows from Lemma 1. ■

We next derive lower bounds of

$$\begin{aligned}
&H\left(C_i^{(n)}\middle|\boldsymbol{X}_{3-i},(\boldsymbol{X}_1,\boldsymbol{X}_2)\in\widetilde{\mathcal{D}}_\gamma^{(n)}\right)\\
&=H\left(\widetilde{C}_i^{(n)}\middle|\widetilde{\boldsymbol{X}}_{3-i}\right), i=1,2,\\
&H\left(C_1^{(n)}C_2^{(n)}\middle|(\boldsymbol{X}_1,\boldsymbol{X}_2)\in\widetilde{\mathcal{D}}_\gamma^{(n)}\right)=H\left(\widetilde{C}_1^{(n)}\widetilde{C}_2^{(n)}\right).
\end{aligned}$$

On lower bounds of those three quantities we have the following lemma:

Lemma 3: For any $\gamma>0$,

$$H\left(\widetilde{C}_i^{(n)}\middle|\widetilde{\boldsymbol{X}}_{3-i}\right)\ge n[H(X_i|X_{3-i})-\gamma]+\log Q_{12},\ i=1,2, \tag{20}$$
$$H\left(\widetilde{C}_1^{(n)}\widetilde{C}_2^{(n)}\right)\ge n[H(X_1X_2)-\gamma]+\log Q_{12}. \tag{21}$$

Proof: We first prove (20). By a symmetrical structure of the problem it suffices to prove the bound for $i=1$. We have the following chain of inequalities:

$$\begin{aligned}
&H\left(\widetilde{C}_1^{(n)}\middle|\widetilde{\boldsymbol{X}}_2\right)\\
&=\sum_{c_1\in\mathcal{M}_1^{(n)}}\sum_{\boldsymbol{x}_2\in\left(\widetilde{\mathcal{D}}_\gamma^{(n)}\right)_2}p_{\widetilde{C}_1^{(n)}\widetilde{\boldsymbol{X}}_2}(c_1,\boldsymbol{x}_2)\log\frac{1}{p_{\widetilde{C}_1^{(n)}|\widetilde{\boldsymbol{X}}_2}(c_1|\boldsymbol{x}_2)}\\
&\overset{(a)}{\ge}\sum_{c_1\in\mathcal{M}_1^{(n)}}\sum_{\boldsymbol{x}_2\in\left(\widetilde{\mathcal{D}}_\gamma^{(n)}\right)_2}p_{\widetilde{C}_1^{(n)}\widetilde{\boldsymbol{X}}_2}(c_1,\boldsymbol{x}_2)\\
&\quad\times\log\left[Q_{1|2}(\boldsymbol{x}_2)2^{n[H(X_1|X_2)-\gamma]}\right]\\
&=\sum_{\boldsymbol{x}_2\in\left(\widetilde{\mathcal{D}}_\gamma^{(n)}\right)_2}p_{\widetilde{\boldsymbol{X}}_2}(\boldsymbol{x}_2)\log Q_{1|2}(\boldsymbol{x}_2)\\
&\quad+n[H(X_1|X_2)-\gamma]\\
&=\frac{\sum_{\boldsymbol{x}_2\in\left(\widetilde{\mathcal{D}}_\gamma^{(n)}\right)_2}p_{\boldsymbol{X}_2}(\boldsymbol{x}_2)Q_{1|2}(\boldsymbol{x}_2)\log Q_{1|2}(\boldsymbol{x}_2)}{\sum_{\boldsymbol{x}_2\in\left(\widetilde{\mathcal{D}}_\gamma^{(n)}\right)_2}p_{\boldsymbol{X}_2}(\boldsymbol{x}_2)Q_{1|2}(\boldsymbol{x}_2)}\\
&\quad+n[H(X_1|X_2)-\gamma].
\end{aligned} \tag{22}$$

Step (a) follows from (16) in Lemma 2. To derive a lower bound of $H\left(\widetilde{C}_1^{(n)}\middle|\widetilde{\boldsymbol{X}}_2\right)$, it suffices to estimate a lower bound

of the first term in the right member of (22). We denote this quantity by Λ.

Define the probability distribution $\widetilde{p}_2$ on $\left(\widetilde{\mathcal{D}}_\gamma^{(n)}\right)_2$ by

$$\widetilde{p}_2(\boldsymbol{x}_2) := \frac{p_{\boldsymbol{X}_2}(\boldsymbol{x}_2)}{\sum_{\boldsymbol{x}_2 \in \left(\widetilde{\mathcal{D}}_\gamma^{(n)}\right)_2} p_{\boldsymbol{X}_2}(\boldsymbol{x}_2)} = \frac{p_{\boldsymbol{X}_2}(\boldsymbol{x}_2)}{p_{\boldsymbol{X}_2}\left(\left(\widetilde{\mathcal{D}}_\gamma^{(n)}\right)_2\right)}.$$

Set

$$\Lambda_1 := \sum_{\boldsymbol{x}_2 \in \left(\widetilde{\mathcal{D}}_\gamma^{(n)}\right)_2} \widetilde{p}_2(\boldsymbol{x}_2) Q_{1|2}(\boldsymbol{x}_2) \log Q_{1|2}(\boldsymbol{x}_2)$$
$$\Lambda_2 := \sum_{\boldsymbol{x}_2 \in \left(\widetilde{\mathcal{D}}_\gamma^{(n)}\right)_2} \widetilde{p}_2(\boldsymbol{x}_2) Q_{1|2}(\boldsymbol{x}_2)$$

Then Λ can be expressed as $\Lambda = \Lambda_1 \Lambda_2^{-1}$. Furthermore, by definition we have

$$\Lambda_2 = Q_{12}\left[p_{\boldsymbol{X}_2}\left(\left(\widetilde{\mathcal{D}}_\gamma^{(n)}\right)_2\right)\right]^{-1}. \tag{23}$$

On lower bounds of Λ, we have the following chain of inequalities:

$$\begin{aligned}\Lambda &= \frac{1}{\Lambda_2} \sum_{\boldsymbol{x}_2 \in \left(\widetilde{\mathcal{D}}_\gamma^{(n)}\right)_2} \widetilde{p}_2(\boldsymbol{x}_2) Q_{1|2}(\boldsymbol{x}_2) \log Q_{1|2}(\boldsymbol{x}_2) \\ &\overset{\text{(a)}}{\geq} \frac{1}{\Lambda_2} \Lambda_2 \log \Lambda_2 \overset{\text{(b)}}{=} \log \frac{Q_{12}}{p_{\boldsymbol{X}_2}\left(\left(\widetilde{\mathcal{D}}_\gamma^{(n)}\right)_2\right)} \geq \log Q_{12}. \end{aligned} \tag{24}$$

Step (a) follows from the convex property of $z \log z$ for $z > 0$ and the Jensen's inequality. Step (b) follows from (23). We next prove (21). We have the following chain of inequalities:

$$\begin{aligned} H\left(\widetilde{C}_1^{(n)} \widetilde{C}_2^{(n)}\right) &= \sum_{(c_1,c_2) \in \mathcal{C}_1^{(n)} \times \mathcal{C}_2^{(n)}} p_{\widetilde{C}_1^{(n)} \widetilde{C}_1^{(n)}}(c_1, c_2) \\ &\quad \times \log \frac{1}{q_{\widetilde{C}_1^{(n)} \widetilde{C}_1^{(n)}}(c_1, c_2)} \\ &\overset{\text{(a)}}{\geq} \sum_{(c_1,c_2) \in \mathcal{C}_1^{(n)} \times \mathcal{C}_2^{(n)}} p_{\widetilde{C}_1^{(n)}, \widetilde{C}_2^{(n)}}(c_1, c_2) \\ &\quad \times \log \left[Q_{12} 2^{n[H(X_1 X_2) - \gamma]}\right] \\ &= \log Q_{12} + n[H(X_1 X_2) - \gamma]. \end{aligned}$$

Step (a) follows from (17) in Lemma 2. ■

We next evaluate the following quantities:

$$\begin{aligned} &H\left(C_i^{(n)} \middle| \boldsymbol{X}_1, \boldsymbol{X}_2, (\boldsymbol{X}_1, \boldsymbol{X}_2) \in \widetilde{\mathcal{D}}_\gamma^{(n)}\right) \\ &= H(\widetilde{C}_i^{(n)} | \widetilde{\boldsymbol{X}}_1 \widetilde{\boldsymbol{X}}_2) \leq H(\widetilde{C}_i^{(n)} | \widetilde{\boldsymbol{X}}_i),\ i = 1, 2, \\ &H\left(C_1^{(n)} C_2^{(n)} \middle| \boldsymbol{X}_1, \boldsymbol{X}_2, (\boldsymbol{X}_1, \boldsymbol{X}_2) \in \widetilde{\mathcal{D}}_\gamma^{(n)}\right) \\ &= H\left(\widetilde{C}_1^{(n)} \widetilde{C}_1^{(n)} \middle| \widetilde{\boldsymbol{X}}_1 \widetilde{\boldsymbol{X}}_2\right). \end{aligned}$$

We have the following lemma.

Lemma 4: We have the following:

$$\begin{aligned} &H\left(C_i^{(n)} \middle| \boldsymbol{X}_1 \boldsymbol{X}_2, (\boldsymbol{X}_1, \boldsymbol{X}_2) \in \widetilde{\mathcal{D}}_\gamma^{(n)}\right) \\ &\leq H\left(C_i^{(n)} \middle| \boldsymbol{X}_i, (\boldsymbol{X}_1, \boldsymbol{X}_2) \in \widetilde{\mathcal{D}}_\gamma^{(n)}\right) \\ &\leq nH(K_i),\ i = 1, 2, \end{aligned} \tag{25}$$

$$\begin{aligned} &H\left(C_1^{(n)} C_2^{(n)} \middle| \boldsymbol{X}_1 \boldsymbol{X}_2, (\boldsymbol{X}_1, \boldsymbol{X}_2) \in \widetilde{\mathcal{D}}_\gamma^{(n)}\right) \\ &\leq nH(K_1 K_2). \end{aligned} \tag{26}$$

Proof: We first prove the bound (25) . For each $i = 1, 2$, we have the following chain of inequalities:

$$\begin{aligned} &H\left(C_i^{(n)} \middle| \boldsymbol{X}_1 \boldsymbol{X}_2, (\boldsymbol{X}_1, \boldsymbol{X}_2) \in \widetilde{\mathcal{D}}_\gamma^{(n)}\right) \\ &\leq H\left(C_i^{(n)} \middle| \boldsymbol{X}_i, (\boldsymbol{X}_1, \boldsymbol{X}_2) \in \widetilde{\mathcal{D}}_\gamma^{(n)}\right) \\ &= H\left(\Phi_{\boldsymbol{X}_i}^{(n)}(\boldsymbol{K}_i) \middle| \boldsymbol{X}_i, (\boldsymbol{X}_1, \boldsymbol{X}_2) \in \widetilde{\mathcal{D}}_\gamma^{(n)}\right) \\ &\overset{\text{(a)}}{\leq} H\left(\boldsymbol{K}_i \middle| \boldsymbol{X}_i, (\boldsymbol{X}_1, \boldsymbol{X}_2) \in \widetilde{\mathcal{D}}_\gamma^{(n)}\right) \overset{\text{(b)}}{=} nH(K_i). \end{aligned}$$

Step (a) follows from the data processing inequality. Step (b) follows from $\boldsymbol{K}_i \perp \boldsymbol{X}_1 \boldsymbol{X}_2$ and the memoryless property of the key sources. We next prove (26). We have the following chain of inequalities:

$$\begin{aligned} &H\left(C_1^{(n)} C_2^{(n)} \middle| \boldsymbol{X}_1 \boldsymbol{X}_2, (\boldsymbol{X}_1, \boldsymbol{X}_2) \in \widetilde{\mathcal{D}}_\gamma^{(n)}\right) \\ &= H\left(\Phi_{\boldsymbol{X}_1}^{(n)}(\boldsymbol{K}_1) \Phi_{\boldsymbol{X}_2}^{(n)}(\boldsymbol{K}_2) \middle| \boldsymbol{X}_1 \boldsymbol{X}_2, (\boldsymbol{X}_1, \boldsymbol{X}_2) \in \widetilde{\mathcal{D}}_\gamma^{(n)}\right) \\ &\overset{\text{(a)}}{\leq} H\left(\boldsymbol{K}_1 \boldsymbol{K}_2 \middle| \boldsymbol{X}_1 \boldsymbol{X}_2, (\boldsymbol{X}_1, \boldsymbol{X}_2) \in \widetilde{\mathcal{D}}_\gamma^{(n)}\right) \overset{\text{(b)}}{=} nH(K_1 K_2). \end{aligned}$$

Step (a) follows from the data processing inequality. Step (b) follows from $\boldsymbol{K}_1 \boldsymbol{K}_2 \perp \boldsymbol{X}_1 \boldsymbol{X}_2$ and the memoryless property of the key sources. ■

The following lemma show a relationship between security, reliability and mutual information.

Lemma 5: We have the followings.

$$Q_{12}^{-1} \delta \geq I\left(\boldsymbol{X}_1 \boldsymbol{X}_2; C_1^{(n)} C_2^{(n)} \middle| (\boldsymbol{X}_1, \boldsymbol{X}_2) \in \widetilde{\mathcal{D}}_\gamma^{(n)}\right). \tag{27}$$

Proof: Define

$$\xi(\boldsymbol{X}_1, \boldsymbol{X}_2) := \begin{cases} 1 & \text{if } (\boldsymbol{X}_1, \boldsymbol{X}_2) \in \widetilde{\mathcal{D}}_\gamma^{(n)}, \\ 0 & \text{otherwise.} \end{cases}$$

On lower bounds of $I(\boldsymbol{X}_1 \boldsymbol{X}_2;\ C_1^{(n)} C_2^{(n)})$, we have the following chain of inequalities:

$$\begin{aligned} &I(\boldsymbol{X}_1 \boldsymbol{X}_2; C_1^{(n)} C_2^{(n)}) = I(\boldsymbol{X}_1 \boldsymbol{X}_2, \xi(\boldsymbol{X}_1, \boldsymbol{X}_2); C_1^{(n)} C_2^{(n)}) \\ &\geq I\left(\boldsymbol{X}_1 \boldsymbol{X}_2; C_1^{(n)} C_2^{(n)} \middle| \xi(\boldsymbol{X}_1, \boldsymbol{X}_2)\right) \\ &\geq Q_{12} I\left(\boldsymbol{X}_1 \boldsymbol{X}_2; C_1^{(n)} C_2^{(n)} \middle| (\boldsymbol{X}_1, \boldsymbol{X}_2) \in \widetilde{\mathcal{D}}_\gamma^{(n)}\right), \end{aligned}$$

from which we have

$$\begin{aligned} &Q_{12}^{-1} I(\boldsymbol{X}_1 \boldsymbol{X}_2; C_1^{(n)} C_2^{(n)}) \\ &\quad \geq I\left(\boldsymbol{X}_1 \boldsymbol{X}_2; C_1^{(n)} C_2^{(n)} \middle| (\boldsymbol{X}_1, \boldsymbol{X}_2) \in \widetilde{\mathcal{D}}_\gamma^{(n)}\right). \end{aligned}$$

Since $I(\boldsymbol{X}_1 \boldsymbol{X}_2; C_1^{(n)} C_2^{(n)}) \leq \delta$, we have the bound (27). ■

C. Proofs of Propositions 1 and 2.

In this subsection we prove Propositions 1 and 2.

Proof of Proposition 1: On lower bounds of $I(\boldsymbol{X}_1\boldsymbol{X}_2; C_1^{(n)}C_2^{(n)}|(\boldsymbol{X}_1,\boldsymbol{X}_2)\in\widetilde{\mathcal{D}}_\gamma^{(n)})$, we have the following three chains of inequalities:

$$\begin{aligned}
&I\left(\boldsymbol{X}_1\boldsymbol{X}_2; C_1^{(n)}C_2^{(n)}\,\middle|(\boldsymbol{X}_1,\boldsymbol{X}_2)\in\widetilde{\mathcal{D}}_\gamma^{(n)}\right)\\
&\geq I(\boldsymbol{X}_i, C_i^{(n)}|\boldsymbol{X}_{3-i},(\boldsymbol{X}_1,\boldsymbol{X}_2)\in\widetilde{\mathcal{D}}_\gamma^{(n)})\\
&= H\left(C_i^{(n)}\,\middle|\boldsymbol{X}_{3-i},(\boldsymbol{X}_1,\boldsymbol{X}_2)\in\widetilde{\mathcal{D}}_\gamma^{(n)}\right)\\
&\quad - H\left(C_i^{(n)}\,\middle|\boldsymbol{X}_1\boldsymbol{X}_2,(\boldsymbol{X}_1,\boldsymbol{X}_2)\in\widetilde{\mathcal{D}}_\gamma^{(n)}\right).\\
&\overset{(a)}{\geq} H(\widetilde{C}_i^{(n)}|\widetilde{\boldsymbol{X}}_{3-i}) - nH(K_i)\\
&\overset{(b)}{\geq} n[H(X_i|X_{3-i})-\gamma] + \log Q_{12} - nH(K_i). \qquad (28)
\end{aligned}$$

$$\begin{aligned}
&I\left(\boldsymbol{X}_1\boldsymbol{X}_2; C_1^{(n)}C_2^{(n)}\,\middle|(\boldsymbol{X}_1,\boldsymbol{X}_2)\in\widetilde{\mathcal{D}}_\gamma^{(n)}\right)\\
&= H\left(C_1^{(n)}C_2^{(n)}\,\middle|(\boldsymbol{X}_1,\boldsymbol{X}_2)\in\widetilde{\mathcal{D}}_\gamma^{(n)}\right)\\
&\quad - H\left(C_1^{(n)}C_2^{(n)}\,\middle|\boldsymbol{X}_1\boldsymbol{X}_2.(\boldsymbol{X}_1,\boldsymbol{X}_2)\in\widetilde{\mathcal{D}}_\gamma^{(n)}\right)\\
&\overset{(c)}{\geq} H(\widetilde{C}_1^{(n)}\widetilde{C}_2^{(n)}) - nH(K_1K_2)\\
&\overset{(d)}{\geq} n[H(X_1X_2)-\gamma] + \log Q_{12} - nH(K_1K_2). \qquad (29)
\end{aligned}$$

Step (a) follows from the bound (25) in Lemma 4. Step (b) follows from the bound (20) in Lemma 3. Step (c) follows from the bound (26) in Lemma 4. Step d) follows from the bound (21) in Lemma 3. Combining (27) with (28) and (29), we have the following three bounds:

$$\left.\begin{aligned}
Q_{12}^{-1}\delta &\geq n[H(X_i|X_{3-i})-\gamma]\\
&\quad + \log Q_{12} - nH(K_i),\ i=1,2,\\
Q_{12}^{-1}\delta &\geq n[H(X_1X_2)-\gamma]\\
&\quad + \log Q_{12} - nH(K_1K_2).
\end{aligned}\right\} \qquad (30)$$

Those are equivalent to the followings:

$$\left.\begin{aligned}
H(X_i|X_{3-i}) &\leq H(K_i)+\gamma\\
&\quad + \frac{1}{n}\left[\frac{\delta}{Q_{12}} + \log\frac{1}{Q_{12}}\right],\ i=1,2\\
H(X_1X_2) &\leq H(K_1K_2)+\gamma\\
&\quad + \frac{1}{n}\left[\frac{\delta}{Q_{12}} + \log\frac{1}{Q_{12}}\right].
\end{aligned}\right\} \qquad (31)$$

Here we note that

$$\begin{aligned}
Q_{12} &= p_{\boldsymbol{X}_1\boldsymbol{X}_2}\left(\widetilde{\mathcal{D}}_\gamma^{(n)}\right) = p^n_{X_1X_2}\left(\widetilde{\mathcal{D}}_\gamma^{(n)}\right)\\
&\geq 1-\nu_n(\gamma,\varepsilon). \qquad (32)
\end{aligned}$$

From (31) and (32), we have the bound in Proposition 1. ■

Proof of Proposition 2: We assume that

$$(R_1,R_2)\in\mathcal{S}^*(\varepsilon,\delta|p_{X_1X_2},p_{K_1K_2}).$$

Then there exists a sequence $\{(\Phi_1^{(n)},\Phi_2^{(n)},\ \Psi^{(n)})\}_{n\geq1}$ such that $\forall\gamma>0$, $\exists n_0=n_0(\gamma)\in\mathbb{N}$, $\forall n\geq n_0$, we have

$$\frac{1}{n}\log|\mathcal{C}_i^{(n)}| \leq R_i+\gamma,\ i=1,2, \qquad (33)$$

$$p_{\mathrm{e}}(\phi_1^{(n)},\phi_2^{(n)},\psi^{(n)}|p^n_{X_1X_2}) \leq \varepsilon, \qquad (34)$$

$$I(C_1^{(n)}C_2^{(n)};\boldsymbol{X}_1\boldsymbol{X}_2) \leq \delta. \qquad (35)$$

Fix $\gamma>0$ arbitrary. By Lemma 3, we have that

$$H\left(\widetilde{C}_1^{(n)}\widetilde{C}_2^{(n)}\right) \geq n[H(X_1X_2)-\gamma] + \log Q_{12}. \qquad (36)$$

From (36) and the assumption $R_1+R_2=H(X_1X_2)$, we have

$$H\left(\widetilde{C}_1^{(n)}\widetilde{C}_2^{(n)}\right) \geq n[R_1+R_2-\gamma] + \log Q_{12}. \qquad (37)$$

On the other hand, we have

$$H\left(\widetilde{C}_i^{(n)}\right) \overset{(a)}{\leq} \log|\mathcal{C}_i^{(n)}| \overset{(b)}{\leq} n[R_i+\gamma], i=1,2. \qquad (38)$$

Step (a) follows from $\widetilde{C}_i^{(n)}\in\mathcal{C}_i^{(n)}, i=1,2$. Step (b) follows from (33). From (37) and (38), we have

$$H\left(\widetilde{C}_i^{(n)}\right) \geq n[R_i-2\gamma] + \log Q_{12},\ i=1,2. \qquad (39)$$

Then for each $i=1,2$, we have the following chain of inequalities:

$$\begin{aligned}
Q_{12}^{-1}\delta &\overset{(a)}{\geq} I\left(\boldsymbol{X}_1\boldsymbol{X}_2; C_1^{(n)}C_2^{(n)}\,\middle|(\boldsymbol{X}_1,\boldsymbol{X}_2)\in\widetilde{\mathcal{D}}_\gamma^{(n)}\right)\\
&\geq I\left(\boldsymbol{X}_i; C_i^{(n)}\,\middle|(\boldsymbol{X}_1,\boldsymbol{X}_2)\in\widetilde{\mathcal{D}}_\gamma^{(n)}\right)\\
&= H\left(\widetilde{C}_i^{(n)}\right) - H\left(C_i^{(n)}\,\middle|\boldsymbol{X}_i,(\boldsymbol{X}_1,\boldsymbol{X}_2)\in\widetilde{\mathcal{D}}_\gamma^{(n)}\right)\\
&\overset{(b)}{\geq} n[R_i-2\gamma] + \log Q_{12} - H(K_i). \qquad (40)
\end{aligned}$$

Step (a) follows from Lemma 5. Step (b) follows from (39) and Lemma 4. From (40), we have

$$R_i \leq H(K_i) + 2\gamma + \frac{1}{n}\left[\frac{\delta}{Q_{12}} + \log\frac{1}{Q_{12}}\right],\ i=1,2. \qquad (41)$$

Here we note that

$$\begin{aligned}
Q_{12} &= p_{\boldsymbol{X}_1\boldsymbol{X}_2}\left(\widetilde{\mathcal{D}}_\gamma^{(n)}\right) = p^n_{X_1X_2}\left(\widetilde{\mathcal{D}}_\gamma^{(n)}\right)\\
&\geq 1-\nu_n(\gamma,\varepsilon). \qquad (42)
\end{aligned}$$

From (41) and (42), we have the bound in Proposition 2. ■

Appendix

A. Proof of Property 1

In this appendix we prove Property 1.

Proof of Property 1 : Under $(\boldsymbol{x}_1,\boldsymbol{x}_2),(\boldsymbol{x}_1',\boldsymbol{x}_2')\in\mathcal{D}^{(n)}$ and $(\boldsymbol{x}_1,\boldsymbol{x}_2)\neq(\boldsymbol{x}_1',\boldsymbol{x}_2')$, we assume that

$$(\Phi^{(n)}_{1,\boldsymbol{k}_1}(\boldsymbol{x}_1),\Phi^{(n)}_{2,\boldsymbol{k}_2}(\boldsymbol{x}_2)) = (\Phi^{(n)}_{1,\boldsymbol{k}_1}(\boldsymbol{x}_1'),\Phi^{(n)}_{2,\boldsymbol{k}_2}(\boldsymbol{x}_2')). \qquad (43)$$

Then we have the following:

$$\begin{aligned}(\boldsymbol{x}_1,\boldsymbol{x}_2) &\overset{\text{(a)}}{=} \psi^{(n)}(\phi_1^{(n)}(\boldsymbol{k}_1),\phi_2^{(n)}(\boldsymbol{k}_2),\\ &\overset{\text{(b)}}{=} \Psi^{(n)}_{\boldsymbol{k}_1,\boldsymbol{k}_2}(\Phi^{(n)}_{1,\boldsymbol{k}_1}(\boldsymbol{x}_1),\Phi^{(n)}_{2,\boldsymbol{k}_2}(\boldsymbol{x}_2))\\ &\overset{\text{(c)}}{=} \Psi^{(n)}_{\boldsymbol{k}_1,\boldsymbol{k}_2}(\Phi^{(n)}_{1,\boldsymbol{k}_1}(\boldsymbol{x}'_1),\Phi^{(n)}_{2,\boldsymbol{k}_2}(\boldsymbol{x}'_2))\\ &\overset{\text{(d)}}{=} \psi^{(n)}(\phi_1^{(n)}(\boldsymbol{x}'_1),\phi_2^{(n)}(\boldsymbol{x}'_2)) \overset{\text{(e)}}{=} (\boldsymbol{x}'_1,\boldsymbol{x}'_2). \end{aligned} \tag{44}$$

Steps (a) and (e) follow from the definition of $\mathcal{D}^{(n)}$. Step (c) follows from (43). Steps (b) and (d) follow from the relationship between $(\phi_1^{(n)},\phi_2^{(n)},\psi^{(n)})$ and $(\Phi^{(n)}_{1,\boldsymbol{k}_1},\Phi^{(n)}_{2,\boldsymbol{k}_2},\Psi^{(n)}_{\boldsymbol{k}_1,\boldsymbol{k}_2})$. The equality (44) contradicts the first assumption. Hence we must have Property 1. ■

B. Proof of Lemma 1

In this appendix we prove Lemma 1. Before proving this lemma we give an observation on $p_{C_1^{(n)}|\boldsymbol{X}_1\boldsymbol{X}_2}$ and $p_{C_1^{(n)}C_2^{(n)}|\boldsymbol{X}_1\boldsymbol{X}_2}$. For $\boldsymbol{x}_i\in\mathcal{X}_i^n$, $i=1,2$, we set

$$\mathcal{A}_{\boldsymbol{x}_i}(c_i):=\left\{\boldsymbol{k}_i:\Phi^{(n)}_{i,\boldsymbol{x}_i}(\boldsymbol{k}_i)=c_i\right\}.$$

Furthermore, for $(\boldsymbol{x}_1,\boldsymbol{x}_2)\in\mathcal{X}_1^n\times\mathcal{X}_2^n$, we set

$$\mathcal{A}_{\boldsymbol{x}_1,\boldsymbol{x}_2}(c_1,c_2):=\left\{(\boldsymbol{k}_1,\boldsymbol{k}_2):\Phi^{(n)}_{i,\boldsymbol{x}_i}(\boldsymbol{k}_i)=c_i,i=1,2\right\}.$$

We have that for each $(c_i,\boldsymbol{x}_1,\boldsymbol{x}_2)\in\mathcal{C}_i^{(n)}\times\mathcal{X}_1^n\times\mathcal{X}_2^n$, $i=1,2$,

$$\begin{aligned}&p_{C_i^{(n)}|\boldsymbol{X}_1\boldsymbol{X}_2}(c_i|\boldsymbol{x}_1,\boldsymbol{x}_2)\\ &=\Pr\left\{\boldsymbol{K}_i\in\mathcal{A}_{\boldsymbol{x}_i}(c_i)\middle|\boldsymbol{X}_1=\boldsymbol{x}_1,\boldsymbol{X}_2=\boldsymbol{x}_2\right\}\\ &\overset{\text{(a)}}{=}\Pr\left\{\boldsymbol{K}_i\in\mathcal{A}_{\boldsymbol{x}_i}(c_i)\right\}.\end{aligned}\tag{45}$$

Step (a) follows from $\boldsymbol{K}_i\perp(\boldsymbol{X}_1,\boldsymbol{X}_2)$. We have that for each $(c_1,c_2,\boldsymbol{x}_1,\boldsymbol{x}_2)\in\mathcal{C}_1^{(n)}\times\mathcal{C}_2^{(n)}\times\mathcal{X}_1^n\times\mathcal{X}_2^n$,

$$\begin{aligned}&p_{C_1^{(n)}C_2^{(n)}|\boldsymbol{X}_1\boldsymbol{X}_2}(c_1,c_2|\boldsymbol{x}_1,\boldsymbol{x}_1)\\ &=\Pr\left\{(\boldsymbol{K}_1,\boldsymbol{K}_2)\in\mathcal{A}_{\boldsymbol{x}_1,\boldsymbol{x}_2}(c_1,c_2)\middle|\boldsymbol{X}_1=\boldsymbol{x}_1,\boldsymbol{X}_2=\boldsymbol{x}_2\right\}\\ &\overset{\text{(a)}}{=}\Pr\left\{(\boldsymbol{K}_1,\boldsymbol{K}_2)\in\mathcal{A}_{\boldsymbol{x}_1,\boldsymbol{x}_2}(c_1,c_2)\right\}.\end{aligned}\tag{46}$$

Step (a) follows from $(\boldsymbol{K}_1,\boldsymbol{K}_2)\perp(\boldsymbol{X}_1,\boldsymbol{X}_2)$.

Proof of Lemma 1: Property 1 implies that

$$\begin{aligned}&\mathcal{A}_{\boldsymbol{x}_i}(c_i)\cap\mathcal{A}_{\boldsymbol{x}'_i}(c_i)=\emptyset\\ &\text{for } \boldsymbol{x}_i,\boldsymbol{x}'_i\in\mathcal{D}^{(n)}_{i|3-i}(\boldsymbol{x}_{3-i}),\boldsymbol{x}_i\neq\boldsymbol{x}'_i,\end{aligned}\tag{47}$$

$$\begin{aligned}&\mathcal{A}_{\boldsymbol{x}_1,\boldsymbol{x}_2}(c_1,c_2)\cap\mathcal{A}_{\boldsymbol{x}'_1,\boldsymbol{x}'_2}(c_1,c_2)=\emptyset\\ &\text{for } (\boldsymbol{x}_1,\boldsymbol{x}_2)\neq(\boldsymbol{x}'_1,\boldsymbol{x}'_2)\in\mathcal{D}^{(n)}.\end{aligned}\tag{48}$$

We first prove (2) of Lemma 1. For each $i=1,2$, we have the following chain of equalities:

$$\begin{aligned}&\sum_{\boldsymbol{x}_i\in\mathcal{D}^{(n)}_{i|3-i}(\boldsymbol{x}_{3-i})}p_{C_i^{(n)}|\boldsymbol{X}_1\boldsymbol{X}_2}(c_i|\boldsymbol{x}_1,\boldsymbol{x}_2)\\ &\overset{\text{(a)}}{=}\sum_{\boldsymbol{x}_i\in\mathcal{D}^{(n)}_{i|3-i}(\boldsymbol{x}_{3-i})}\Pr\left\{\boldsymbol{K}_i\in\mathcal{A}_{\boldsymbol{x}_i}(c_i)\right\}\\ &\overset{\text{(b)}}{=}\Pr\left\{\boldsymbol{K}_i\in\bigcup_{\boldsymbol{x}_i\in\mathcal{D}^{(n)}_{i|3-i}(\boldsymbol{x}_{3-i})}\mathcal{A}_{\boldsymbol{x}_i}(c_i)\right\}\le 1.\end{aligned}$$

Step (a) follows from (45). Step (b) follows from (47). We next prove (3) of Lemma 1. We have the following chain of equalities:

$$\begin{aligned}&\sum_{(\boldsymbol{x}_1,\boldsymbol{x}_2)\in\mathcal{D}^{(n)}}p_{C_1^{(n)}C_2^{(n)}|\boldsymbol{X}_1\boldsymbol{X}_2}(c_1,c_2|\boldsymbol{x}_1,\boldsymbol{x}_2)\\ &\overset{\text{(a)}}{=}\sum_{(\boldsymbol{x}_1,\boldsymbol{x}_2)\in\mathcal{D}^{(n)}}\Pr\left\{(\boldsymbol{K}_1,\boldsymbol{K}_2)\in\mathcal{A}_{\boldsymbol{x}_1,\boldsymbol{x}_2}(c_1,c_2)\right\}\\ &\overset{\text{(b)}}{=}\Pr\left\{(\boldsymbol{K}_1,\boldsymbol{K}_2)\in\bigcup_{(\boldsymbol{x}_1,\boldsymbol{x}_2)\in\mathcal{D}^{(n)}}\mathcal{A}_{\boldsymbol{x}_1,\boldsymbol{x}_2}(c_1,c_2)\right\}\le 1.\end{aligned}$$

Step (a) follows from (46). Step (b) follows from (48). ■

C. Proof of Property 3

In this appendix we prove Property 3.

Proof of Property 3: For each

$$(c_1,c_2,\boldsymbol{x}_1,\boldsymbol{x}_2)\in\mathcal{C}^{(n)}_{(\Phi_1^{(n)},\Phi_2^{(n)})(\widetilde{\mathcal{D}}_\gamma^{(n)})}\times\widetilde{\mathcal{D}}_\gamma^{(n)},$$

we have the following chain of equalities:

$$\begin{aligned}&p_{\widetilde{C}_1^{(n)}\widetilde{C}_2^{(n)}\widetilde{\boldsymbol{X}}_1\widetilde{\boldsymbol{X}}_2}(c_1,c_2,\boldsymbol{x}_1,\boldsymbol{x}_2)\\ &\overset{\text{(a)}}{=}\Pr\Big\{(\Phi^{(n)}_{1,\widetilde{\boldsymbol{X}}_1}(\boldsymbol{K}_1),\Phi^{(n)}_{2,\widetilde{\boldsymbol{X}}_2}(\boldsymbol{K}_2),\widetilde{\boldsymbol{X}}_1,\widetilde{\boldsymbol{X}}_2)\\ &\qquad=(c_1,c_2,\boldsymbol{x}_1,\boldsymbol{x}_2)\Big\}\\ &=\Pr\Big\{(\Phi^{(n)}_{1,\boldsymbol{x}_1}(\boldsymbol{K}_1),\Phi^{(n)}_{2,\boldsymbol{x}_2}(\boldsymbol{K}_2),\widetilde{\boldsymbol{X}}_1,\widetilde{\boldsymbol{X}}_2)\\ &\qquad=(c_1,c_2,\boldsymbol{x}_1,\boldsymbol{x}_2)\Big\}\\ &\overset{\text{(b)}}{=}\Pr\Big\{(\Phi^{(n)}_{1,\boldsymbol{x}_1}(\boldsymbol{K}_1),\Phi^{(n)}_{2,\boldsymbol{x}_2}(\boldsymbol{K}_2)=(c_1,c_2)\Big\}\\ &\quad\times\Pr\Big\{(\widetilde{\boldsymbol{X}}_1,\widetilde{\boldsymbol{X}}_2)=(\boldsymbol{x}_1,\boldsymbol{x}_2)\Big\}.\end{aligned}\tag{49}$$

Step (a) follows from (11). Step (b) follows from $(\Phi^{(n)}_{1,\boldsymbol{x}_1}(\boldsymbol{K}_1),\Phi^{(n)}_{2,\boldsymbol{x}_2}(\boldsymbol{K}_2))\perp(\widetilde{\boldsymbol{X}}_1,\widetilde{\boldsymbol{X}}_2)$. From (49), we continue to

compute to obtain the following chain of equalities:

$$
\begin{aligned}
&p_{\widetilde{C}_1^{(n)}\widetilde{C}_2^{(n)}\widetilde{\boldsymbol{X}}_1\widetilde{\boldsymbol{X}}_2}(c_1,c_2,\boldsymbol{x}_1,\boldsymbol{x}_2)\\
&\overset{\text{(a)}}{=}\Pr\Big\{(\Phi_{1,\boldsymbol{x}_1}^{(n)}(\boldsymbol{K}_1),\Phi_{2,\boldsymbol{x}_2}^{(n)}(\boldsymbol{K}_2)=(c_1,c_2)\Big\}\\
&\quad\times\Pr\Big\{(\boldsymbol{X}_1,\boldsymbol{X}_2)=(\boldsymbol{x}_1,\boldsymbol{x}_2)\,\Big|(\boldsymbol{X}_1,\boldsymbol{X}_2)\in\widetilde{\mathcal{D}}_\gamma^{(n)}\Big\}\\
&\overset{\text{(b)}}{=}\Pr\Big\{(\Phi_{1,\boldsymbol{x}_1}^{(n)}(\boldsymbol{K}_1),\Phi_{2,\boldsymbol{x}_2}^{(n)}(\boldsymbol{K}_2),\boldsymbol{X}_1,\boldsymbol{X}_2)\\
&\qquad=(c_1,c_2,\boldsymbol{x}_1,\boldsymbol{x}_2)\,\Big|(\boldsymbol{X}_1,\boldsymbol{X}_2)\in\widetilde{\mathcal{D}}_\gamma^{(n)}\Big\}\\
&=\Pr\Big\{(\Phi_{1,\boldsymbol{X}_1}^{(n)}(\boldsymbol{K}_1),\Phi_{2,\boldsymbol{X}_2}^{(n)}(\boldsymbol{K}_2),\boldsymbol{X}_1,\boldsymbol{X}_2)\\
&\qquad=(c_1,c_2,\boldsymbol{x}_1,\boldsymbol{x}_2)\,\Big|(\boldsymbol{X}_1,\boldsymbol{X}_2)\in\widetilde{\mathcal{D}}_\gamma^{(n)}\Big\}\\
&=\Pr\Big\{(C_1^{(n)},C_2^{(n)},\boldsymbol{X}_1,\boldsymbol{X}_2)=(c_1,c_2,\boldsymbol{x}_1,\boldsymbol{x}_2)\\
&\qquad\Big|(\boldsymbol{X}_1,\boldsymbol{X}_2)\in\widetilde{\mathcal{D}}_\gamma^{(n)}\Big\}.
\end{aligned}
$$

Step (a) follows from (49) and the definition of $(\widetilde{\boldsymbol{X}}_1,\widetilde{\boldsymbol{X}}_2)$. Step (b) follows from $(\Phi_{1,\boldsymbol{x}_1}^{(n)}(\boldsymbol{K}_1),\Phi_{2,\boldsymbol{x}_2}^{(n)}(\boldsymbol{K}_2))\perp(\boldsymbol{X}_1,\boldsymbol{X}_2)$. ■

REFERENCES

[1] Y. Oohama and B. Santoso, "Strong converse for distributed source coding with encryption using correlated keys," in *IEEE Information Theory Workshop, ITW 2021, Kanazawa, Japan, October 17-21, 2021*. IEEE, 2021, pp. 1–6. [Online]. Available: https://doi.org/10.1109/ITW48936.2021.9611414

[2] B. Santoso and Y. Oohama, "Privacy amplification of distributed encrypted sources with correlated keys," in *2017 IEEE International Symposium on Information Theory - ISIT*. IEEE, 2017, pp. 958–962.

[3] ——, "Secrecy amplification of distributed encrypted sources with correlated keys using post-encryption-compression," *IEEE Trans. Information Forensics and Security*, vol. 14, no. 11, pp. 3042–3056, November 2019.

[4] Y. Oohama and B. Santoso, "A framework for distributed source coding with encryption: a new strong converse and more," in *2022 International Symposium on Information Theory and Its Applications (ISITA)*, 2022, pp. 189–193.

[5] M. Johnson, P. Ishwar, V. Prabhakaran, D. Schonberg, and K. Ramchandran, "On compressing encrypted data," *IEEE Transactions on Signal Processing*, vol. 52, no. 10, pp. 2992–3006, Oct 2004.

[6] D. Klinc, C. Hazay, A. Jagmohan, H. Krawczyk, and T. Rabin, "On compression of data encrypted with block ciphers," *IEEE Trans. Information Theory*, vol. 58, no. 11, pp. 6989–7001, 2012. [Online]. Available: https://doi.org/10.1109/TIT.2012.2210752

[7] C. E. Shannon, "A mathematical theory of communication," *Bell System Technical Journal*, vol. 27, pp. 379–423, 623–656, July, October 1948.

[8] H. Yamamoto, "Information theory in cryptology," *IEICE Transactions*, vol. E.74, no. 9, pp. 2456–2464, September 1991.

[9] M. Iwamoto, K. Ohta, and J. Shikata, "Security formalizations and their relationships for encryption and key agreement in information-theoretic cryptography," *IEEE Trans. Inf. Theory*, vol. 64, no. 1, pp. 654–685, 2018. [Online]. Available: https://doi.org/10.1109/TIT.2017.2744650

[10] M. Iwamoto, "Security notions for information theoretically secure encryptions," in *Proc. IEEE Int. Symp. Inf. Theory 2011*, Saint-Petersburg, Russia, 2011, pp. 1777–1781.

[11] Y. Oohama and T. S. Han, "Universal coding for the Slepian-Wolf data compression system and the strong converse theorem," *IEEE Trans. Inform. Theory*, vol. 40, no. 6, pp. 1908–1919, November 1994.