arXiv:2103.00793v2 [cs.CV] 20 Apr 2021

Embedded Knowledge Distillation in Depth-Level Dynamic Neural Network

Qi Zhao[1] Shuchang Lyu[1] Zhiwei Zhang[1] Ting-Bing Xu[1] * Guangliang Cheng[2]

[1] Beihang University [2] SenseTime Research, Beijing

{zhaoqi, lyushuchang, zhangzwq1998, tingbing_xu}@buaa.edu.cn, chengguangliang@sensetime.com

Abstract

In real applications, different computation-resource devices need different-depth networks (e.g., ResNet-18/34/50) with high-accuracy. Usually, existing methods either design multiple networks and train them independently, or construct depth-level/width-level dynamic neural networks which is hard to prove the accuracy of each sub-net. In this article, we propose an elegant Depth-Level Dynamic Neural Network (DDNN) integrated different-depth sub-nets of similar architectures. To improve the generalization of sub-nets, we design the Embedded-Knowledge-Distillation (EKD) training mechanism for the DDNN to implement knowledge transfer from the teacher (full-net) to multiple students (sub-nets). Specifically, the Kullback-Leibler (KL) divergence is introduced to constrain the posterior class probability consistency between full-net and sub-nets, and self-attention distillation on the same resolution feature of different depth is addressed to drive more abundant feature representations of sub-nets. Thus, we can obtain multiple high-accuracy sub-nets simultaneously in a DDNN via the online knowledge distillation in each training iteration without extra computation cost. Extensive experiments on CIFAR-10/100, and ImageNet datasets demonstrate that sub-nets in DDNN with EKD training achieve better performance than individually training networks while preserving the original performance of full-nets.

1. Introduction

Recent years have witnessed significant progress in various computer vision tasks[3, 8, 9] using deep convolutional neural networks. To meet different resource-constrained devices, researchers usually need to design a series of different-depth networks such as VGG-13/16/19 [10], ResNet-18/34/50/101 [3], and DensNet-121/169/201 [6]. Generally, it requires to train different-depth networks individually in Fig. 1(a) and download/offload different models multiple times according to device-resource constraints in real applications, which increases the training and deploying cost dramatically. In fact, deeper network (e.g., ResNet-34) contains completely the smaller architecture (e.g., ResNet-18) due to the configuration of the same residual blocks. Therefore, it motivates us to think why not directly train a single deep full-net in Fig. 1(c) to dynamically switch different-depth sub-nets during the deployment stage.

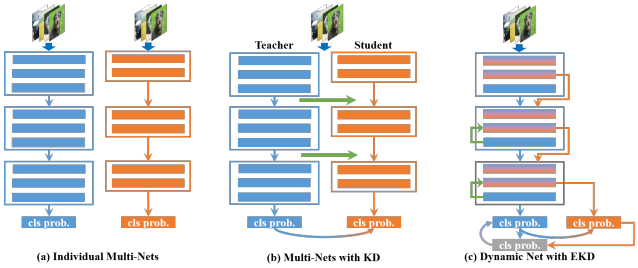

Figure 1. Diagrams of three cases. (a) Individual multi-nets. (b) Teacher-to-student with KD. (c) DDNN with EKD.

Previous works [5, 15, 12] utilize dynamic routines to construct depth-wise dynamic neural networks. [14, 13] train a shared network with switchable batch normalization to adjust its width to construct width-level dynamic neural networks. However, above-mentioned notable works can not prove the accuracy of each sub-net. [11, 1] introduce knowledge distillation [4] into ensemble network to dynamically switch branches during inference. However, when more sub-nets are required, the total size of ensemble network will become larger and the training process will become more complex.

How to efficiently train one DDNN with multiple high-accuracy sub-nets with simple training strategy? We propose a depth-level dynamic neural network embedded knowledge distillation (EKD-DDNN). As shown in Fig. 1(c), we first split the full-net by setting split points in each stage of network. Then, we utilize the predicted class posterior probabilities of full-net as soft labels to guide the learning of different-depth sub-nets. We also introduce the

*Corresponding author

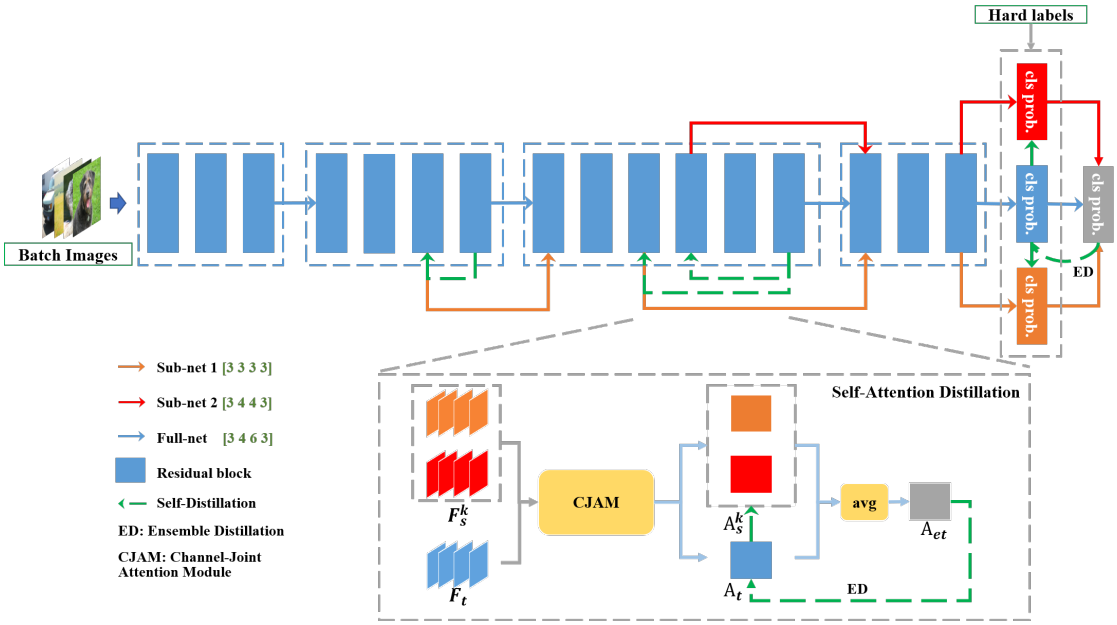

Figure 2. Proposed depth-level dynamic neural network with embedded knowledge distillation training. In this case, full-net is ResNet-50 while sub-nets are ResNet-44 and ResNet-38. [3, 4, 6, 3] means each stage of full-net contain 3, 4, 6 and 3 residual blocks respectively.

self-attention on the same resolution feature of different-depth to drive the learned semantic feature as consistently as possible between full-net and sub-net. Meanwhile, we still keep the conventional cross-entropy loss term with hard labels for the training of full-net and sub-nets. In addition, we introduce ensemble learning to enhance full-net using ensemble result of full-net and sub-nets as soft-label. Finally, we integrate the above-mentioned strategy and optimize the whole network with EKD mechanism in an end-to-end manner.

To verify the effectiveness of proposed method, we conduct extensive experiments on multiple benchmark datasets (e.g., CIFAR-10/100 [7], and ImageNet [2]) with current state-of-the-art networks (e.g., VGGNet [10], ResNet [3]). Compared to the individually training strategies without shared weights, sub-nets in DDNN with EKD training achieve higher performance while preserving the original accuracy of full-net. The main contributions can be summarized as follows.

- We propose a Depth-Level Dynamic Neural Network for satisfying the requirement of different resource-constrained devices.
- We adopt Embedded-Knowledge-Distillation training mechanism to effectively improve the representative capacity of multiple sub-nets without harming the capacity of full-net.
- Sub-nets with EKD improve considerably, which can sometimes surpass individual training networks by more than 1% on CIFAR and ImageNet.

2. Methodology

In this paper, we focus on constructing depth-level dynamic neural network with EKD training mechanism to excavate the potential representative capacity of sub-nets.

Depth-Level Dynamic Neural Network. Depth-Level dynamic neural network denotes that one deep neural network (i.e., full-net) can dynamically switch its depth to yield different-depth sub-nets for different resource-limited devices. Generally, we select a large baseline network as full-net to design the depth-level dynamic neural network. We first separate the large baseline network into several stages according to the resolution of output feature maps. Then, we skip the deep blocks of some stages to create sub-stages. Finally, a sub-net is formed by creating direct connections between sub-stages of each two neighbouring stages. Fig. 2 uses ResNet-50 as example to show the construction process of DDNN.

Embedded Knowledge Distillation. Fig. 2 shows the detailed training process of our DDNN with the EKD training mechanism. The full-net is used as "teacher model" to provide extra supervised information for guiding the better learning of sub-nets. Meanwhile, the full-net also benefits from better sub-nets because of possessing better sub-nets as "backbone". Besides, full-net is optimized with ensemble logits and attention maps, which means "teacher model" also "discusses" from "student models" for better learning.

As shown in Fig. 2, we embed KD on posterior class

probabilities and intermediate feature maps. Here, we use the common Kullback-Leibler divergence constraint as distillation loss on posterior class probabilities. The formulation is shown in Eq. 1 and Eq. 2.

$$KL_s^k = -\frac{1}{N}\sum_{n=1}^{N} \boldsymbol{p}_t(\boldsymbol{x}_n)\log\frac{\boldsymbol{p}_s^k(\boldsymbol{x}_n)}{\boldsymbol{p}_t(\boldsymbol{x}_n)} \tag{1}$$

$$KL_t = -\frac{1}{N}\sum_{n=1}^{N} \boldsymbol{p}_{et}(\boldsymbol{x}_n)\log\frac{\boldsymbol{p}_t(\boldsymbol{x}_n)}{\boldsymbol{p}_{et}(\boldsymbol{x}_n)} \tag{2}$$

Where $\boldsymbol{p}_t(\boldsymbol{x}_n)$ and $\boldsymbol{p}_s^k(\boldsymbol{x}_n)$ respectively denote the posterior class probability of full-net and sub-nets. $\boldsymbol{p}_{et}(\boldsymbol{x}_n)$ represents ensemble teacher logits which can be formulated as $\boldsymbol{p}_{et}(\boldsymbol{x}_n) = \frac{1}{K+1}(\sum_{k=1}^{K}\boldsymbol{p}_s^k(\boldsymbol{x}_n) + \boldsymbol{p}_t(\boldsymbol{x}_n))$. K is the number of sub-nets.

To further make the semantic feature in the same stage as consistent as possible between full-net and sub-nets, we introduce the self-attention distillation in intermediate feature maps. We adopt mean-squared-error (MSE) loss in each training step. The formulation is shown in Eq. 3 $\sim$ Eq. 6.

$$\boldsymbol{A_t} = \sum_{c=1}^{C}(\boldsymbol{F_t})_{\boldsymbol{c}}, \quad \boldsymbol{A_s^k} = \sum_{c=1}^{C}(\boldsymbol{F_s^k})_{\boldsymbol{c}} \tag{3}$$

$$\boldsymbol{A_{et}} = \frac{1}{K+1}(norm(\boldsymbol{A_t}) + \sum_{k=1}^{K} norm(\boldsymbol{A_s^k})) \tag{4}$$

$$MSE_s^k = \frac{1}{N}\sum_{n=1}^{N} MSE\big(A_s^k(\boldsymbol{x}_n)\|A_t(\boldsymbol{x}_n)\big) \tag{5}$$

$$MSE_t = \frac{1}{N}\sum_{n=1}^{N} MSE\big(A_t(\boldsymbol{x}_n)\|A_{et}(\boldsymbol{x}_n)\big) \tag{6}$$

Where $\boldsymbol{F_t}, \boldsymbol{F_s^k} \in \mathbb{R}^{C\times H\times W}$ indicate feature maps of full-net and k^{th} sub-nets at same level of model. $\boldsymbol{A_t}, \boldsymbol{A_s^k} \in \mathbb{R}^{1\times H\times W}$ indicate channel-joint attention maps, which will be fused to form ensemble attention teacher ($\boldsymbol{A_{et}}$). $norm(\cdot)$ denotes the spatial-wise normalization operation.

Our DDNN fulfils the online EKD learning via *KL*, *MSE* and conventional cross-entropy loss (L_t and L_s^k for full-net and sub-nets each). The whole objective (L) of DDNN with EKD training is defined in Eq. 7.

$$L = \underbrace{L_t + \frac{1}{K}\sum_{k=1}^{K} L_k}_{\text{cross-entropy loss}} + \underbrace{\frac{1}{K+1}\cdot w_k(KL_t + \sum_{k=1}^{K} KL_s^k)}_{\text{KL distillation}} + \underbrace{\frac{1}{K+1}\cdot \alpha_k(MSE_t + \sum_{k=1}^{K} MSE_s^k)}_{\text{Self-attention distillation}} \tag{7}$$

Networks	CIFAR-10			CIFAR-100		
	Individual	DDNN	EKD	Individual	DDNN	EKD
ResNet-16 [2 2 2]	8.87	8.91	**7.99**	33.95	34.23	**32.45**
ResNet-20 [3 3 3]	7.92	8.31	7.94	32.52	33.11	**32.33**
ResNet-20 [3 3 3]	7.92	8.00	**7.34**	32.52	32.62	**30.79**
ResNet-32 [5 5 5]	7.25	7.72	7.28	30.10	31.75	30.24
ResNet-32 [5 5 5]	7.25	7.15	**6.77**	30.10	29.97	**29.17**
ResNet-44 [7 7 7]	6.49	6.78	6.55	29.23	29.81	29.32
ResNet-44 [7 7 7]	6.49	6.77	**6.00**	29.23	29.16	**28.22**
ResNet-56 [9 9 9]	6.09	6.24	6.13	28.58	28.76	**28.47**
ResNet-32 [5 5 5]	7.25	7.57	**6.95**	30.10	31.40	**29.36**
ResNet-44 [7 7 7]	6.49	6.62	**6.19**	29.23	29.88	**28.97**
ResNet-56 [9 9 9]	6.09	6.39	**6.04**	28.58	29.02	28.68
VGG-11 [1 1 2 2 2]	7.68	7.75	**7.14**	32.00	31.73	**30.78**
VGG-16 [2 2 3 3 3]	6.19	6.42	6.20	27.72	28.42	27.83
VGG-13 [2 2 2 2 2]	6.23	6.26	6.27	28.55	28.65	**28.12**
VGG-16 [2 2 3 3 3]	6.09	6.08	6.15	27.72	27.64	27.77

Table 1. Top-1 error rate (%) on CIFAR-10/100. "Individual" means networks training individually. Bold indicates best results.

Where w_k and α_k are the hyper-parameters to adjust the proportions of *KL* distillation loss and *MSE* self-attention distillation loss respectively.

3. Experiments

To evaluate our proposed method, we conduct extensive experiments and exhaustive comparisons on CIFAR-10/100 and ImageNet benchmark datasets.

CIFAR-10/100 Classification. Table 1 shows the detailed comparisons of three cases (Fig. 1). The DDNN trained with only the optimization objective of hard labels from full-net and sub-nets (2nd column) has lower performance than independently individually training (1st column) because these weight-sharing blocks are very hard to simultaneously match the multiple different optimization objectives. Experimental results on the CIFAR-10/100 show that sub-nets in DDNN with EKD training (3rd column) possess the average 1$\sim$2% improvement compared to sub-nets in DDNN with the only hard labels (2nd column). Even compared to the independently trained cases (1st column), sub-nets in DDNN with EKD training still have the 0.5$\sim$1% lower error rate (Bold in Table 1) while preserving the performance of full-net (almost no decline). Especially, EKD mechanism performs stronger on CIFAR-100 than CIFAR-10. It fully displays the effectiveness of the proposed mechanism on more complex task.

ImageNet Classification. Table 2 gives detailed comparisons of three different training frameworks in terms of network architecture, network parameters, and top-1 error rate. As expected, sub-nets in EKD-DDNNs get improved while almost no decline of full-nets. Compared to individual large model (e.g. ResNet-50), our DDNN can integrate multiple networks into one network without adding extra parameters and FLOPs. During inference, DDNN can dy-

Individual networks			DDNN		EKD-DDNN		FLOPs
Networks	Params	Err.	Params	Err.	Params	Err.	
ResNet-18	11.7M	31.22	21.8M	30.96	21.8M	**29.78**	1.8G
ResNet-34	21.8M	26.73		27.44		26.92	3.6G
ResNet-26	16.0M	27.56	25.6M	28.22	25.6M	**26.41**	2.3G
ResNet-50	25.6M	23.94		25.14		24.12	3.8G
ResNet-32	17.4M	26.13	25.6M	27.03	25.6M	**25.39**	2.8G
ResNet-50	25.6M	23.94		24.86		23.99	3.8G
ResNet-41	18.9M	24.80	25.6M	25.71	25.6M	**24.07**	3.4G
ResNet-50	25.6M	23.94		24.69		**23.83**	3.8G
ResNet-38	21.9M	25.19	25.6M	26.45	25.6M	**24.55**	3.2G
ResNet-44	23.3M	24.68		25.32		**24.38**	3.7G
ResNet-50	25.6M	23.94		25.03		24.10	3.8G

Table 2. Top-1 error rate (%) on ImageNet (single-crop testing).

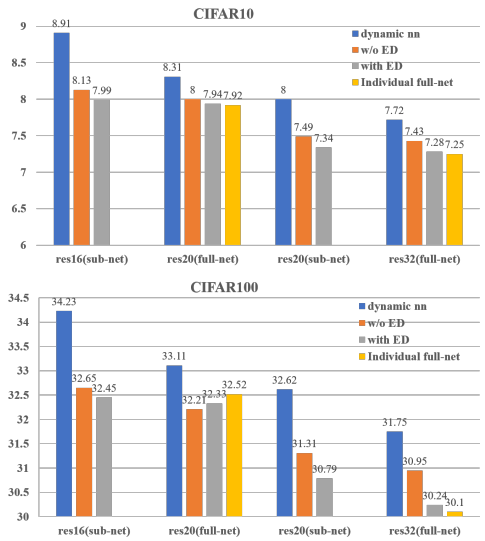

Figure 3. Evaluation on the effectiveness of ensemble distillation.

namically switch the depth to fulfil the deployment of different resource-limited devices.

Effectiveness of Ensemble Distillation. Using full-net to teach sub-net can enhance the performance of sub-nets. However, it is still hard to guarantee the full-net performance using only a set of weight-sharing blocks. To ease the accuracy decline of full-net, we introduce ensemble distillation on posterior class probability and intermediate feature maps. Fig. 3 shows that with ensemble distillation, the accuracy of full-net gets maximally preserved.

4. Conclusion

In this paper, we propose the DDNN with only one full-net parameters to flexibly switch different-depth sub-nets or full-net according to the demands of different resource-limited devices. To improve the performance of sub-nets and full-net in DDNN, we further design the EKD training mechanism, which contains distillation on posterior class probabilities and self-attention on feature maps to exploit the potential representative capacity of the whole DDNN. Extensive experiments demonstrate that our DDNN with EKD training mechanism achieves competitive performance on multiple benchmark datasets. Compared to student networks trained with previous dynamic paradigm, our sub-nets can harvest better performance with no harm to full-net.

References

[1] Umar Asif, Jianbin Tang, and Stefan Harrer. Ensemble knowledge distillation for learning improved and efficient networks. In *ECAI*, volume 325, pages 953–960, 2020. 1

[2] Jia Deng, Wei Dong, Richard Socher, Li-Jia Li, Kai Li, and Fei-Fei Li. Imagenet: A large-scale hierarchical image database. In *CVPR*, pages 248–255, 2009. 2

[3] Kaiming He, Xiangyu Zhang, Shaoqing Ren, and Jian Sun. Deep residual learning for image recognition. In *CVPR*, pages 770–778, 2016. 1, 2

[4] Geoffrey E. Hinton, Oriol Vinyals, and Jeffrey Dean. Distilling the knowledge in a neural network. *CoRR*, abs/1503.02531, 2015. 1

[5] Gao Huang, Danlu Chen, Tianhong Li, Felix Wu, Laurens van der Maaten, and Kilian Q. Weinberger. Multi-scale dense networks for resource efficient image classification. In *ICLR*, 2018. 1

[6] Gao Huang, Zhuang Liu, Laurens van der Maaten, and Kilian Q. Weinberger. Densely Connected Convolutional Networks. In *CVPR*, pages 2261–2269, 2017. 1

[7] Alex Krizhevsky and Geoffrey E. Hinton. Learning multiple layers of features from tiny images. Technical report, 2009. 2

[8] Shaoqing Ren, Kaiming He, Ross B. Girshick, and Jian Sun. Faster R-CNN: Towards Real-Time Object Detection with Region Proposal Networks. *PAMI*, 39(6):1137–1149, 2017. 1

[9] Evan Shelhamer, Jonathan Long, and Trevor Darrell. Fully convolutional networks for semantic segmentation. *PAMI*, 39(4):640–651, 2017. 1

[10] Karen Simonyan and Andrew Zisserman. Very deep convolutional networks for large-scale image recognition. In *ICLR*, 2015. 1, 2

[11] Devesh Walawalkar, Zhiqiang Shen, and Marios Savvides. Online ensemble model compression using knowledge distillation. In *ECCV*, volume 12364, pages 18–35, 2020. 1

[12] Xin Wang, Fisher Yu, Zi-Yi Dou, Trevor Darrell, and Joseph E. Gonzalez. Skipnet: Learning dynamic routing in convolutional networks. In *ECCV*, pages 420–436, 2018. 1

[13] Jiahui Yu and Thomas S. Huang. Universally slimmable networks and improved training techniques. In *ICCV*, pages 1803–1811, 2019. 1

[14] Jiahui Yu, Linjie Yang, Ning Xu, Jianchao Yang, and Thomas S. Huang. Slimmable neural networks. In *ICLR*, 2019. 1

[15] Linfeng Zhang, Jiebo Song, Anni Gao, Jingwei Chen, Chenglong Bao, and Kaisheng Ma. Be your own teacher: Improve the performance of convolutional neural networks via self distillation. In *ICCV*, pages 3712–3721, 2019. 1