arXiv:2102.03559v1 [math.AP] 6 Feb 2021

ON THE EXISTENCE AND REGULARITY OF SOLUTIONS OF SEMI-HYPERBOLIC PATCHES TO 2-D EULER EQUATIONS WITH VAN DER WAALS GAS

Rahul Barthwal
Department of Mathematics,
Indian Institute of Technology Kharagpur,
Kharagpur, India
rahulbarthwal@iitkgp.ac.in

T. Raja Sekhar
Department of Mathematics,
Indian Institute of Technology Kharagpur,
Kharagpur, India
trajasekhar@maths.iitkgp.ac.in

December 23, 2024

ABSTRACT

This article is concerned in establishing the existence and regularity of solution of semi-hyperbolic patch problem for two-dimensional isentropic Euler equations with van der Waals gas. This type of solution appears in the transonic flow over an airfoil and Guderley reflection and is very common in the numerical solution of Riemann problems. We use the idea of characteristic decomposition and bootstrap method to prove the existence of global smooth solution which is uniformly $C^{1,\frac{1}{2}}$ continuous up to the sonic curve. We also prove that the sonic curve is $C^{1,\frac{1}{2}}$ continuous. Further, we show the formation of shock as an envelope for positive characteristics before reaching their sonic points.

1 Introduction

Cauchy problem in several space dimension for hyperbolic system of conservation laws is a very important but complicated open problem. A particular kind of Cauchy problem in two-dimensional case is the two-dimensional Riemann problem which consists of initial data that are constant along any ray passing through origin. The study of two-dimensional Riemann problems are very interesting and challenging in the context of two-dimensional hyperbolic system of conservation laws. A significant research has been done for the two-dimensional compressible Euler system and various other important models for a typical case of two-dimensional Riemann problems which is known as the four wave Riemann problem. The four wave Riemann problem is an initial value problem where the initial data are constant in each of the four quadrants of the physical plane. For the two-dimensional compressible Euler system, a beautiful conjecture for the possible structures of solution for four wave Riemann problem was provided in the ground breaking paper of Zhang and Zheng [1]. Several numerical results have been obtained in the field of two-dimensional Riemann problems for gasdynamics equations and many small-scale structures have been observed in those numerical simulations [2, 3, 4]. One of such structures is the semi-hyperbolic patch which appears very often in many cases of two-dimensional Riemann problems for compressible Euler system, pressure-gradient equations, magnetohydrodynamics and etc(For details see [5, 6, 7, 8, 9]). The semi-hyperbolic patch is defined as a patch kind of solution in which one set of characteristics starts on a sonic curve and ends on either a transonic shock wave or a sonic curve. These type of solutions appear in many other situations too such as reflection of rarefaction wave along a compressive corner [10], transonic flow over an airfoil [11] and Guderley shock reflection of the von Neumann triple point paradox [12, 13]. These patch type solutions are very meaningful and important for the construction of global solution of mixed-type equations in future.

The semi-hyperbolic patch, first time, has been identified among the small-scale structures in the work of Song and Zheng [7] for pressure-gradient system. The same problem for isothermal Euler equations was studied by Hu et al. in [14] while for isentropic case by Li and Zheng in [8] and extended to magnetohydrodynamic system by Chen and Lai in [9]. The regularity of the solution of semi-hyperbolic patch problems have also been widely discussed. The

regularity of solution of the semi-hyperbolic patch problem for the pressure-gradient system was discussed in [15] and for isentropic Euler system in [16]. The regularity results for isothermal Euler equations have been discussed by Hu et al. [17]. The regularity results obtained for isentropic Euler system in [16] were improved by Hu et al. in [18]. For more details on ongoing research on two-dimensional Euler system and related models, we refer the reader to [19, 20, 21, 22, 23, 24, 25, 26, 27, 28, 29, 30, 31, 32, 33, 34]. All the above works are based on the beautiful concept of characteristic decomposition initiated in the work of Dai and Zhang [35]. The progress made in the field of semi-hyperbolic patch problems leads to a natural question of determining whether these results can be extended for more realistic gases, for instance, van der Waals gas. The main purpose of this article is to establish the existence and regularity results for the solution of the semi-hyperbolic patch problem for two-dimensional isentropic Euler equations with van der Waals gas.

Let us consider the two-dimensional isentropic compressible Euler equations [16] as follows:

$$\begin{aligned} \rho_t + (\rho u)_x + (\rho v)_y &= 0, \\ (\rho u)_t + (\rho u^2 + p)_x + (\rho uv)_y &= 0, \\ (\rho v)_t + (\rho uv)_x + (\rho v^2 + p)_y &= 0, \end{aligned} \tag{1.1}$$

where ρ denotes the density, u and v denotes the flow velocity in the x and y direction, respectively and p denotes the pressure of the gas.

We consider a polytropic van der Waals gas with the equation of state [36] as $p(\tau) = \frac{K}{(\tau-b)^{\gamma+1}} - \frac{a}{\tau^2}$ where γ is a constant such that $\gamma \in (0,1)$. The quantity $\tau = \frac{1}{\rho}$ is known as the specific volume of the gas, K is a positive constant which depends on the entropy of the system. The attraction between the gas molecules is represented by the positive constant a and the compressibility limit of these molecules in the gas is represented by the positive constant b. For the case $a = 0$, this corresponds to dusty gas while for $a = b = 0$, this behaves as polytropic ideal gas.

The expression for speed of sound is given by $c(\tau) = \sqrt{-\tau^2 p'(\tau)}$ with

$$p'(\tau) = -\frac{K(\gamma+1)}{(\tau-b)^{\gamma+2}} + \frac{2a}{\tau^3}, \qquad p''(\tau) = \frac{K(\gamma+1)(\gamma+2)}{(\tau-b)^{\gamma+3}} - \frac{6a}{\tau^4}. \tag{1.2}$$

We give the following list of notations, these are very important in the further discussion of the paper

$$\begin{cases} \kappa(\tau) = \dfrac{-2p'(\tau)}{2p'(\tau) + \tau p''(\tau)} = \dfrac{2 - \frac{2b}{\tau} - \frac{4a(\tau-b)^{\gamma+3}}{K(\gamma+1)\tau^4}}{\gamma + \frac{2b}{\tau} + \frac{2a(\tau-b)^{\gamma+3}}{K(\gamma+1)\tau^4}}, \\ m(\tau) = \dfrac{\kappa(\tau)-1}{\kappa(\tau)+1} = \dfrac{2 - \gamma - \frac{4b}{\tau} - \frac{2a(\tau-b)^{\gamma+3}}{K(\gamma+1)\tau^4}}{\gamma + 2 + \frac{6a(\tau-b)^{\gamma+3}}{K(\gamma+1)\tau^4}}, \\ \mu^2(\tau) = \dfrac{1}{1+\kappa(\tau)}, \quad \Omega(\tau,\omega) = m(\tau) - \tan^2\omega, \\ \bar{\partial}_+ = \cos\alpha\partial_\xi + \sin\alpha\partial_\eta, \ \ \bar{\partial}_- = \cos\beta\partial_\xi + \sin\beta\partial_\eta, \\ \sigma = \dfrac{\alpha+\beta}{2}, \quad \omega = \dfrac{\alpha-\beta}{2}, \quad \tan\alpha = \lambda_+, \ \ \tan\beta = \lambda_- \end{cases} \tag{1.3}$$

where α and β are defined as characteristic angles and $\bar{\partial}_\pm$ denotes the normalized directional derivatives along the characteristic directions in self-similar plane [25].

From the expressions above we can observe that for sufficiently large $\tau_1 > b$, when $\tau > \tau_1$ we have $p'(\tau) < 0$, $p''(\tau) > 0$, $\kappa(\tau) > 0$ and $0 < m(\tau) < 1$. Further, for some technical reasons we adopt the hypothesis that $\kappa'(\tau) > 0$ without loss of generality.

This paper is organized as follows. In Section 2 we give some preliminaries and mainly interested with characteristic decompositions in terms of characteristic angles and the speed of sound. We define our problem precisely and establish the boundary data estimates to prove the existence of local solution in Section 3. Section 4 is devoted to construct the uniform lower and upper bounds of the characteristic directional derivatives of speed of sound. We discuss the global existence of solution by extending the local solution up to the sonic boundary by solving many small Goursat problems in each step of extension in Section 5. In Section 6 we study the formation of shock as an envelope for positive characteristics before reaching their sonic points. The regularity of solution in partial hodograph plane and self-similar plane is established in Section 7 and 8, respectively. In Section 9 we provide the concluding remarks.

2 System in two-dimensional self-similar flow

We denote $U = (u - \xi)$ and $V = (v - \eta)$ as pseudo-flow velocity. Then in the self-similar plane $\left(\xi = \frac{x}{t}, \eta = \frac{y}{t}\right)$, the reduced Euler equations can be written as

$$\begin{aligned} (\rho U)_\xi + (\rho V)_\eta + 2\rho &= 0, \\ UU_\xi + VU_\eta + \tau p_\xi + U &= 0, \\ UV_\xi + VU_\eta + \tau p_\eta + V &= 0. \end{aligned} \tag{2.1}$$

Here we assume that the flow is irrotational which implies that $v_\xi = u_\eta$. Now we introduce a potential function $\phi(\xi, \eta)$ such that $\phi_\xi = U$ and $\phi_\eta = V$. Then using the last two equations of system (2.1) we can easily obtain the pseudo-Bernoulli's law

$$\frac{U^2 + V^2}{2} + \frac{K}{(\tau - b)^\gamma}\left(\frac{\gamma + 1}{\gamma} + \frac{b}{\tau - b}\right) - \frac{2a}{\tau} + \phi = a_1 \tag{2.2}$$

where a_1 is a constant which can be taken as 0 throughout this article without loss of generality.

The above system (2.1) can be reduced into matrix form as

$$\begin{bmatrix} u \\ v \end{bmatrix}_\xi + \begin{bmatrix} \frac{-2UV}{c^2 - U^2} & \frac{c^2 - V^2}{c^2 - U^2} \\ -1 & 0 \end{bmatrix} \begin{bmatrix} u \\ v \end{bmatrix}_\eta = 0, \tag{2.3}$$

which gives the eigenvalues $\lambda_\pm = \dfrac{UV \pm c\sqrt{U^2 + V^2 - c^2}}{U^2 - c^2}$ with corresponding left eigenvectors $l_\pm = (1, \lambda_\mp)$. Multiplying $l_\pm$ with the system (2.3) we obtain the system of characteristic equations as

$$\bar{\partial}_\pm u + \lambda_\mp \bar{\partial}_\pm v = 0. \tag{2.4}$$

2.1 Characteristic equations in terms of characteristic angles

Here we provide first order characteristic decompositions of characteristic angles without proof. The proofs of these decompositions can be found in [37].

Using [37] we can obtain $U = c\dfrac{\cos\sigma}{\sin\omega}$ and $V = c\dfrac{\sin\sigma}{\sin\omega}$ with

$$\begin{cases} \bar{\partial}_- c = \dfrac{\mu^2(\tau)}{\tan\omega}(c\bar{\partial}_-\alpha - 2\sin^2\omega), \\ c\bar{\partial}_-\beta = \Omega(\tau,\omega)\cos^2\omega(c\bar{\partial}_-\alpha - 2\sin^2\omega) = \dfrac{\Omega(\tau,\omega)}{2\mu^2(\tau)}\sin 2\omega\bar{\partial}_- c, \\ \bar{\partial}_+ c = -\dfrac{\mu^2(\tau)}{\tan\omega}(c\bar{\partial}_+\beta + 2\sin^2\omega), \\ c\bar{\partial}_+\alpha = \Omega(\tau,\omega)\cos^2\omega(c\bar{\partial}_+\beta + 2\sin^2\omega) = -\dfrac{\Omega(\tau,\omega)}{2\mu^2(\tau)}\sin 2\omega\bar{\partial}_+ c, \\ c\bar{\partial}_\pm\omega = \tan\omega(1 + \kappa(\tau)\sin^2\omega)\bar{\partial}_\pm c + \sin^2\omega. \end{cases} \tag{2.5}$$

2.2 Characteristic decompositions

In this section we derive characteristic decomposition form for the variables α, β and c which is important and very useful for establishing a priori gradient estimates of solution. First we cite the following second order decompositions of c from Lai [37].

Proposition 2.1. *The variable c satisfies the following characteristic decompositions*

$$\begin{cases} c\bar{\partial}_+\bar{\partial}_- c &= \bar{\partial}_- c\left\{\sin 2\omega + \dfrac{\bar{\partial}_- c}{2\mu^2(\tau)\cos^2\omega} + \left(1 + \dfrac{\Omega(\tau,\omega)\cos 2\omega}{2\mu^2(\tau)} + \tau\kappa'(\tau)\right)\bar{\partial}_+ c\right\}, \\ c\bar{\partial}_-\bar{\partial}_+ c &= \bar{\partial}_+ c\left\{\sin 2\omega + \dfrac{\bar{\partial}_+ c}{2\mu^2(\tau)\cos^2\omega} + \left(1 + \dfrac{\Omega(\tau,\omega)\cos 2\omega}{2\mu^2(\tau)} + \tau\kappa'(\tau)\right)\bar{\partial}_- c\right\}. \end{cases} \tag{2.6}$$

Using the above decompositions we are able to prove the following important decompositions for the variable c.

Corollary 2.1. *c satisfies the following second order decompositions*

$$\bar{\partial}_+\left(\frac{\bar{\partial}_- c}{c}\right)=\frac{\bar{\partial}_- c}{c}\left\{\left(\frac{\bar{\partial}_+ c+\bar{\partial}_- c}{2c\mu^2(\tau)\cos^2\omega}\right)+\frac{\sin 2\omega}{c}+\left(\tau\kappa'(\tau)-(1+2\kappa(\tau)\sin^2\omega)\right)\frac{\bar{\partial}_+ c}{c}\right\}, \tag{2.7}$$

$$\bar{\partial}_-\left(\frac{\bar{\partial}_+ c}{c}\right)=\frac{\bar{\partial}_+ c}{c}\left\{\left(\frac{\bar{\partial}_+ c+\bar{\partial}_- c}{2c\mu^2(\tau)\cos^2\omega}\right)+\frac{\sin 2\omega}{c}+\left(\tau\kappa'(\tau)-(1+2\kappa(\tau)\sin^2\omega)\right)\frac{\bar{\partial}_- c}{c}\right\}. \tag{2.8}$$

Proof. The proof of this corollary can be obtained by using direct calculations from the decompositions in proposition 2.1. So we omit the details. ■

Corollary 2.2. *c satisfies the following second order equations in homogeneous form*

$$c\bar{\partial}_+\left(\frac{-\bar{\partial}_- c}{\sin^2\omega}\right)=\left(\frac{-\bar{\partial}_- c}{\sin^2\omega}\right)\left\{\left(\frac{\bar{\partial}_+ c+\bar{\partial}_- c}{2\mu^2(\tau)\cos^2\omega}\right)-\left(\tau\kappa'(\tau)+4\kappa(\tau)\sin^2\omega+2\right)\bar{\partial}_+ c\right\}, \tag{2.9}$$

$$c\bar{\partial}_-\left(\frac{\bar{\partial}_+ c}{\sin^2\omega}\right)=\left(\frac{\bar{\partial}_+ c}{\sin^2\omega}\right)\left\{\left(\frac{\bar{\partial}_+ c+\bar{\partial}_- c}{2\mu^2(\tau)\cos^2\omega}\right)-\left(\tau\kappa'(\tau)+4\kappa(\tau)\sin^2\omega+2\right)\bar{\partial}_- c\right\}. \tag{2.10}$$

Proof. This corollary is a direct consequence of the proposition 2.1. Hence we omit its proof. ■

Proposition 2.2. *The variables α and β satisfy the following second order decompositions*

$$c\bar{\partial}_+\bar{\partial}_-\alpha+\Psi_1\bar{\partial}_-\alpha=\left\{\tan\omega(1-4\sin^2\omega)+\frac{2\tan\omega\tau\kappa'(\tau)}{\Omega(\tau,\omega)}(\mu^2(\tau))^2\right\}\bar{\partial}_+\alpha, \tag{2.11}$$

$$c\bar{\partial}_-\bar{\partial}_+\beta+\Psi_2\bar{\partial}_+\beta=\left\{\tan\omega(1-4\sin^2\omega)+\frac{2\tan\omega\tau\kappa'(\tau)}{\Omega(\tau,\omega)}(\mu^2(\tau))^2\right\}\bar{\partial}_-\beta, \tag{2.12}$$

in which

$$\begin{aligned}\Psi_1=\sin^2\omega(2\tan\omega-\Omega(\tau,\omega)\sin 2\omega)+\tau\kappa'(\tau)\sin 2\omega(\mu^2(\tau))^2-\frac{c}{\sin 2\omega}\bar{\partial}_-\alpha\\ +\left\{\frac{1}{\sin 2\omega}-\frac{\Omega(\tau,\omega)\sin 2\omega}{2}+\frac{\tau\kappa'(\tau)}{\tan\omega}(\mu^2(\tau))^2\right\}c\bar{\partial}_+\beta,\end{aligned}$$

and

$$\begin{aligned}\Psi_2=\sin^2\omega(2\tan\omega-\Omega(\tau,\omega)\sin 2\omega)+\tau\kappa'(\tau)\sin 2\omega(\mu^2(\tau))^2+\frac{c}{\sin 2\omega}\bar{\partial}_+\beta\\ -\left\{\frac{1}{\sin 2\omega}-\frac{\Omega(\tau,\omega)\sin 2\omega}{2}+\frac{\tau\kappa'(\tau)}{\tan\omega}(\mu^2(\tau))^2\right\}c\bar{\partial}_-\alpha.\end{aligned}$$

Proof. Using the decomposition of the variable c from (2.5) in (2.6) we obtain

$$\begin{aligned}c\bar{\partial}_+\left[\frac{\mu^2(\tau)c\bar{\partial}_-\alpha}{\tan\omega}-\mu^2(\tau)\sin 2\omega\right]=\left[\frac{\mu^2(\tau)c\bar{\partial}_-\alpha}{\tan\omega}-\mu^2(\tau)\sin 2\omega\right]\\ \times\left\{\sin 2\omega+\frac{c\bar{\partial}_-\beta}{\Omega(\tau,\omega)\cos^2\omega\sin 2\omega}-\left(\frac{\Omega(\tau,\omega)\cos 2\omega}{2\mu^2(\tau)}+1+\tau\kappa'(\tau)\right)\frac{2c\mu^2(\tau)\bar{\partial}_+\alpha}{\Omega(\tau,\omega)\sin 2\omega}\right\}\end{aligned} \tag{2.13}$$

Now we compute

$$\begin{aligned}\bar{\partial}_+\left(\frac{\mu^2(\tau)c}{\tan\omega}\right)&=\frac{c}{\tan\omega}\left(\mu^2(\tau)\right)'\bar{\partial}_+\tau-\frac{\mu^2(\tau)c}{2\sin^2\omega}(\bar{\partial}_+\alpha-\bar{\partial}_+\beta)+\frac{\mu^2(\tau)}{\tan\omega}\bar{\partial}_+ c\\ &=\frac{-\tau(\mu^2(\tau))^3(\kappa^2(\tau))'c\bar{\partial}_+\alpha}{\Omega(\tau,\omega)\tan\omega\sin 2\omega}-\mu^2(\tau)-\frac{2(\mu^2(\tau))^2c\bar{\partial}_+\alpha}{\Omega(\tau,\omega)\tan\omega\sin 2\omega}\\ &\quad+\frac{\mu^2(\tau)c\bar{\partial}_+\alpha}{\Omega(\tau,\omega)\sin 2\omega\sin^2\omega}\left(\tan\omega-\frac{\Omega(\tau,\omega)\sin 2\omega}{2}\right)\end{aligned} \tag{2.14}$$

and

$$\begin{aligned} c\bar{\partial}_+\left(\mu^2(\tau)\sin 2\omega\right) &= c\sin 2\omega(\mu^2(\tau))'\bar{\partial}_+\tau + \mu^2(\tau)c\cos 2\omega[\bar{\partial}_+\alpha - \bar{\partial}_+\beta] \\ &= \frac{-\tau(\mu^2(\tau))^3(\kappa^2(\tau))'c\bar{\partial}_+\alpha}{\Omega(\tau,\omega)} - 2\mu^2(\tau)\sin^2\omega + \mu^2(\tau)\sin^2(2\omega) \\ &\quad - \frac{2\mu^2(\tau)\cos 2\omega c\bar{\partial}_+\alpha}{\Omega(\tau,\omega)\sin 2\omega}\left(\tan\omega - \frac{\Omega(\tau,\omega)\sin 2\omega}{2}\right). \end{aligned} \tag{2.15}$$

so that the L.H.S. of (2.13) becomes

$$\begin{aligned} c\bar{\partial}_+\left[\frac{\mu^2(\tau)c\bar{\partial}_-\alpha}{\tan\omega} - \mu^2(\tau)\sin 2\omega\right] &= \frac{\mu^2(\tau)c}{\tan\omega}c\bar{\partial}_+\bar{\partial}_-\alpha + c\bar{\partial}_-\alpha\bar{\partial}_+\left(\frac{\mu^2(\tau)c}{\tan\omega}\right) - c\bar{\partial}_+\left(\mu^2(\tau)\sin 2\omega\right) \\ &= \frac{\mu^2(\tau)c}{\tan\omega}c\bar{\partial}_+\bar{\partial}_-\alpha + \frac{\tau(\mu^2(\tau))^3(\kappa^2(\tau))'c\bar{\partial}_+\alpha}{\Omega(\tau,\omega)} + 2\mu^2(\tau)\sin^2\omega - \mu^2(\tau)\sin^2(2\omega) \\ &\quad + c\bar{\partial}_-\alpha\left\{\frac{\mu^2(\tau)c\bar{\partial}_+\alpha}{\Omega(\tau,\omega)\sin 2\omega\sin^2\omega}\left(\tan\omega - \frac{\Omega(\tau,\omega)\sin 2\omega}{2}\right) - \frac{\tau(\mu^2(\tau))^3(\kappa^2(\tau))'c\bar{\partial}_+\alpha}{\Omega(\tau,\omega)\tan\omega\sin 2\omega}\right. \\ &\quad \left. - \frac{2(\mu^2(\tau))^2c\bar{\partial}_+\alpha}{\Omega(\tau,\omega)\tan\omega\sin 2\omega} - \mu^2(\tau)\right\} + \frac{2\mu^2(\tau)\cos 2\omega c\bar{\partial}_+\alpha}{\Omega(\tau,\omega)\sin 2\omega}\left(\tan\omega - \frac{\Omega(\tau,\omega)\sin 2\omega}{2}\right). \end{aligned} \tag{2.16}$$

While the R.H.S. of (2.13) is

$$\begin{aligned} &\frac{\mu^2(\tau)c}{\tan\omega}\bar{\partial}_-\alpha\left\{\sin 2\omega - 2\tan\omega + \frac{c\bar{\partial}_-\alpha}{\sin 2\omega} - \left(1 + \frac{\Omega(\tau,\omega)\cos 2\omega}{2\mu^2(\tau)} + \tau\kappa'(\tau)\right)\frac{2c\mu^2(\tau)\bar{\partial}_+\alpha}{\Omega(\tau,\omega)\sin 2\omega}\right\} \\ &\quad + \left(1 + \frac{\Omega(\tau,\omega)\cos 2\omega}{2\mu^2(\tau)} + \tau\kappa'(\tau)\right)\frac{2(\mu^2(\tau))^2c\bar{\partial}_+\alpha}{\Omega(\tau,\omega)} + 2\mu^2(\tau)\sin^2\omega - \mu^2(\tau)\sin^2(2\omega). \end{aligned} \tag{2.17}$$

Comparing L.H.S. and R.H.S. of (2.13) we have

$$\begin{aligned} &c\bar{\partial}_+\bar{\partial}_-\alpha + c\bar{\partial}_-\alpha\left\{\frac{\tan\omega\bar{\partial}_+\alpha}{\Omega(\tau,\omega)\sin 2\omega\sin^2\omega}\left(\tan\omega - \frac{\Omega(\tau,\omega)\sin 2\omega}{2}\right) - \frac{2\mu^2(\tau)\bar{\partial}_+\alpha}{\Omega(\tau,\omega)\sin 2\omega}\right. \\ &\qquad \left. - \frac{\tan\omega}{c} - \frac{\tau((\mu^2(\tau))^2(\kappa^2(\tau))'\bar{\partial}_+\alpha}{\Omega(\tau,\omega)\sin 2\omega}\right\} \\ &\quad + \frac{\tau(\mu^2(\tau))^2(\kappa^2(\tau))'\tan\omega\bar{\partial}_+\alpha}{\Omega(\tau,\omega)} + \frac{2\tan\omega\cos 2\omega\bar{\partial}_+\alpha}{\Omega(\tau,\omega)\sin 2\omega}\left(\tan\omega - \frac{\Omega(\tau,\omega)\sin 2\omega}{2}\right) \\ &= \bar{\partial}_-\alpha\left\{\sin 2\omega - 2\tan\omega + \frac{c\bar{\partial}_-\alpha}{\sin 2\omega} - \left(1 + \frac{\Omega(\tau,\omega)\cos 2\omega}{2\mu^2(\tau)} + \tau\kappa'(\tau)\right)\frac{2c\mu^2(\tau)\bar{\partial}_+\alpha}{\Omega(\tau,\omega)\sin 2\omega}\right\} \\ &\qquad + \left(1 + \frac{\Omega(\tau,\omega)\cos 2\omega}{2\mu^2(\tau)} + \tau\kappa'(\tau)\right)\frac{2\mu^2(\tau)\tan\omega\bar{\partial}_+\alpha}{\Omega(\tau,\omega)}, \end{aligned} \tag{2.18}$$

which can be reduced as

$$c\bar{\partial}_+\bar{\partial}_-\alpha + \Psi_1\bar{\partial}_-\alpha = \Upsilon_1\bar{\partial}_+\alpha \tag{2.19}$$

where the coefficient

$$\begin{aligned} \Psi_1 = \left(\frac{\sin 2\omega}{2} + \frac{c\bar{\partial}_+\beta}{2\tan\omega}\right)&\left[\frac{\tan\omega}{\sin^2\omega}\left(\tan\omega - \frac{\Omega(\tau,\omega)\sin 2\omega}{2}\right) + \Omega(\tau,\omega)\cos 2\omega + 2\tau\kappa'(\tau)(\mu^2(\tau))^2\right] \\ &+ \tan\omega - \sin 2\omega - \frac{c\bar{\partial}_-\alpha}{\sin 2\omega}. \end{aligned} \tag{2.20}$$

By a direct calculation, we obtain the coefficient of $c\bar{\partial}_+\beta$ as

$$\frac{1}{\sin 2\omega} - \frac{\Omega(\tau,\omega)\sin 2\omega}{2} + \frac{\tau\kappa'(\tau)}{\tan\omega}(\mu^2(\tau))^2. \tag{2.21}$$

Also, we calculate directly

$$\begin{aligned}\frac{\sin 2\omega}{2}\left\{\frac{\tan\omega}{\sin^2\omega}\left(\tan\omega-\frac{\Omega(\tau,\omega)\sin 2\omega}{2}\right)+\Omega(\tau,\omega)\cos 2\omega+2\tau\kappa'(\tau)(\mu^2(\tau))^2\right\}&\\ +\tan\omega-\sin 2\omega-\frac{c\bar{\partial}_-\alpha}{\sin 2\omega}&\\ =\sin^2\omega(2\tan\omega-\Omega(\tau,\omega)\sin 2\omega)+\sin 2\omega\tau\kappa'(\tau)(\mu^2(\tau))^2-\frac{c\bar{\partial}_-\alpha}{\sin 2\omega},&\end{aligned}\tag{2.22}$$

Using (2.21) and (2.22) in (2.20) we obtain the value of Ψ_1.

Furthermore, the coefficient

$$\begin{aligned}\Upsilon_1=\frac{-2\tan\omega\cos 2\omega}{\Omega(\tau,\omega)\sin 2\omega}\left(\tan\omega-\frac{\Omega(\tau,\omega)\sin 2\omega}{2}\right)+\left(1+\frac{\Omega(\tau,\omega)\cos 2\omega}{2\mu^2(\tau)}\right)\frac{2\mu^2(\tau)\tan\omega}{\Omega(\tau,\omega)}&\\ +\frac{2\tan\omega\tau\kappa'(\tau)}{\Omega(\tau,\omega)}(\mu^2(\tau))^2&\end{aligned}\tag{2.23}$$

By straightforward computation we have

$$\begin{aligned}&\frac{-2\tan\omega\cos 2\omega}{\Omega(\tau,\omega)\sin 2\omega}\left(\tan\omega-\frac{\Omega(\tau,\omega)\sin 2\omega}{2}\right)+\left(1+\frac{\Omega(\tau,\omega)\cos 2\omega}{2\mu^2(\tau)}\right)\frac{2\mu^2(\tau)\tan\omega}{\Omega(\tau,\omega)}\\ &=\frac{-2\tan\omega}{\Omega(\tau,\omega)\sin 2\omega}\Big[\mu^2(\tau)\sin 2\omega-\Omega(\tau,\omega)\sin 2\omega\cos 2\omega-\cos 2\omega\tan\omega\Big]\\ &=2\tan\omega\left(\frac{1}{2}-\cos 2\omega\right)\\ &=\tan\omega(1-4\sin^2\omega).\end{aligned}\tag{2.24}$$

Then the use of (2.24) in (2.23) yields the value of Υ_1.

Using the values of Ψ_1 and Υ_1 in (2.19) we can obtain the proof of the first part of the Lemma. In a similar manner the other part of the Lemma can be proved. ■

3 Formulation of the problem and local solution

In this section we give a brief description of our problem for (1.1). Let us assume that $R_{14}(\eta)$ be the planar rarefaction wave for (1.1) connecting two constant states $(\rho_1, 0, v_1)$ and $(\rho_4, 0, 0)$ ($c_1 > c_4 > 0$, $v_1 > 0$) in the self-similar plane which is defined as

$$R_{14}(\eta)=\begin{cases}\eta=c+v(\rho), & \eta_4\le\eta\le\eta_1\\ v=\displaystyle\int_{\rho_4}^{\rho}\frac{c}{\rho}d\rho, & 0<\rho_4<\rho<\rho_1\\ u=u_1=u_4=0,\end{cases}\tag{3.1}$$

in the region $\xi > 0$, where $\eta_i = v_i + c_i$, $i = 1, 4$.

The value v_1 is obtained from the solution and we denote A by $(0, v_1 + c_1)$ and B as the intersection point of positive characteristic passing through A and the bottom boundary in the rarefaction wave region. Now under these assumptions we define our problem as follows.

3.1 Problem

Let us consider a positive characteristic $\overline{AB}$ in a planar rarefaction wave region. Let $\overline{BD}$ be the tangential extension of $\overline{AB}$ into a constant state such that both the points A and D are sonic. Let $\overline{BC}$ be a strictly convex negative characteristic such that the endpoint C is a sonic point. Then establish a solution in a maximal hyperbolic region with the boundary data combined on the curve $\overline{ABD}$ and $\overline{BC}$ which means that the region starts from sonic points and ends on either a sonic curve or an envelope of the positive family of characteristics. Further, establish the regularity of solution; see Figure 1.

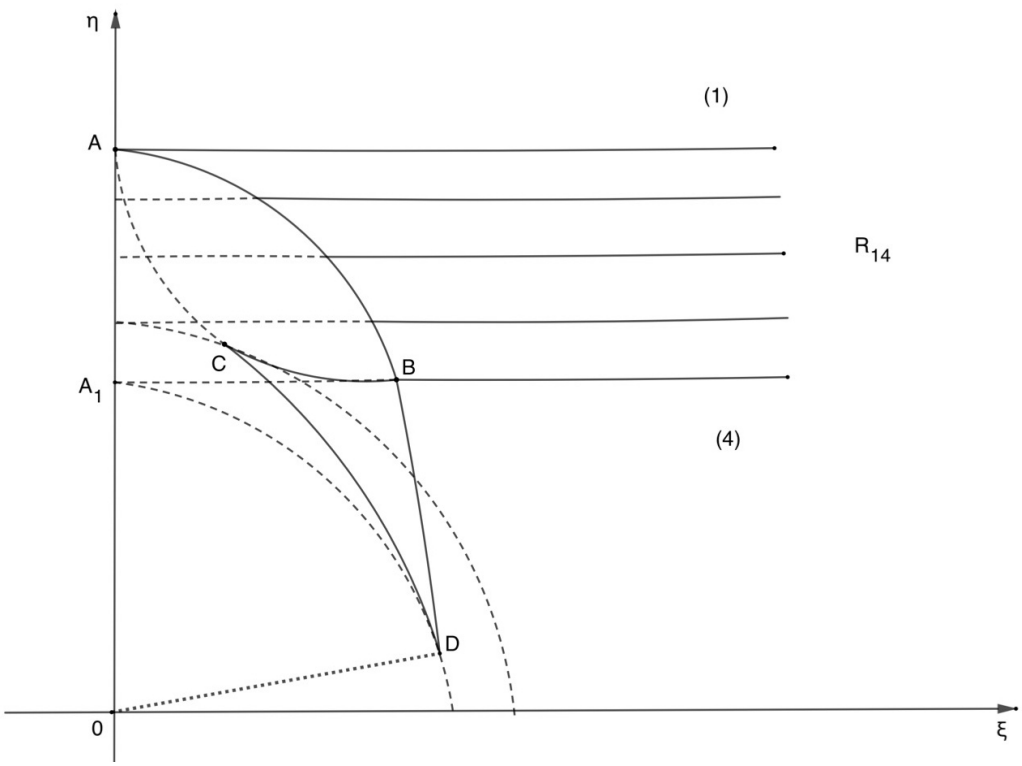

Figure 1: The semi-hyperbolic patch.

3.2 Estimates of boundary data

The boundary data on the characteristics $\overline{AB}$ and $\overline{BC}$ are [8]

$$\begin{cases} \beta|_{\overline{AB}} = 0, & \pi/2 \leq \alpha|_{\overline{BC}} \leq \pi + \beta_C, \\ \pi/2 \leq \alpha|_{\overline{AB}} \leq \pi, & \beta_C \leq \beta|_{\overline{BC}} \leq 0, \\ -\pi/2 < \beta_C < 0, & \dfrac{\pi}{4} < \dfrac{\alpha - \beta}{2} < \dfrac{\pi}{2}, \\ \bar{\partial}_+ \alpha|_{\overline{BA}} > 0, & \bar{\partial}_+ c|_{\overline{BA}} > 0, \\ -\bar{\partial}_- \beta|_{\overline{BC}} < 0, & -\bar{\partial}_- c|_{\overline{BC}} > 0. \end{cases} \tag{3.2}$$

where β_C is the inclination angle of the negative characteristic $\overline{BC}$ at point C.

Hence our problem is a Goursat problem where the boundaries $\overline{AB}$ and $\overline{BC}$ are characteristic boundaries starting from the point B.

3.3 Existence of local solution

To prove the existence of local solution, we parameterize the variables α, β and c on the positive and negative characteristics $\overline{AB}$ and $\overline{BC}$ as a function of parameter s. Further, we assume the point B as the origin ($s = 0$). Then using (2.5) and (3.2) we obtain the boundary data in the form of parameter s as follows:

On $\overline{AB}$ we have

$$\begin{cases} \frac{\pi}{2} < \alpha(s) < \pi, \quad \beta(s) = 0, \\ \frac{\pi}{4} < \frac{\alpha(s) - \beta(s)}{2} < \frac{\pi}{2}, \\ \frac{d\alpha}{ds} > 0, \quad \frac{dc}{ds} > 0, \\ c\frac{d\alpha}{ds} = -\frac{\sin 2\omega}{2\mu^2(\tau)}\Omega(\tau,\omega)\frac{dc}{ds}, \\ c\frac{d\beta}{ds} = -\frac{\tan\omega}{\mu^2(\tau)}\left(\frac{dc}{ds}\right) - 2\left(\sqrt{\left(\frac{d\xi}{ds}\right)^2 + \left(\frac{d\eta}{ds}\right)^2}\right)\sin^2\omega \end{cases} \tag{3.3}$$

and on $\overline{BC}$ we have

$$\begin{cases} \frac{\pi}{2} < \alpha(s) < \pi + \beta_C, \quad \beta_C \le \beta(s) \le 0, \\ \frac{\pi}{4} < \frac{\alpha(s) - \beta(s)}{2} < \frac{\pi}{2}, \\ \frac{d\beta}{ds} < 0, \quad \frac{dc}{ds} > 0, \\ c\frac{d\beta}{ds} = \frac{\sin 2\omega}{2\mu^2(\tau)}\Omega(\tau,\omega)\frac{dc}{ds}, \\ c\frac{d\alpha}{ds} = \frac{\tan\omega}{\mu^2(\tau)}\left(\frac{dc}{ds}\right) + 2\left(\sqrt{\left(\frac{d\xi}{ds}\right)^2 + \left(\frac{d\eta}{ds}\right)^2}\right)\sin^2\omega. \end{cases} \tag{3.4}$$

Using these boundary values we can prove the existence of local solution for our Goursat problem. We summarize this in the following Lemma.

Lemma 3.1. *(Local solution) For sufficiently small $\epsilon > 0$ there exists a unique C^1 solution for the Goursat problem* (2.1)*,* (3.2) *in a small domain D_ϵ closed by the boundaries $\overline{AB}$ and $\overline{BC}$ and a level curve $\omega = \epsilon$. Further, this solution satisfies*

$$\frac{\pi}{4} < \omega < \frac{\pi}{2}, \ \ \pm\bar{\partial}_\pm c > 0, \quad \pm\bar{\partial}_\pm \alpha > 0, \quad \pm\bar{\partial}_\pm \beta < 0 \ \ in \ \ D_\epsilon. \tag{3.5}$$

Proof. It is observed from (3.3) and (3.4) that the compatibility conditions hold at the point B. Therefore, using the method of characteristics [38], we conclude that the Goursat problem (2.1), (3.2) admits a unique C^1 local solution. From boundary estimate (3.2) we have

$$\bar{\partial}_+ c|_{\overline{AB}} > 0 \text{ and } -\bar{\partial}_- c|_{\overline{BC}} > 0.$$

So using the characteristic decompositions from (2.6) we can conclude that

$$\bar{\partial}_+ c > 0 \text{ and } -\bar{\partial}_- c > 0 \text{ in } D_\epsilon.$$

Now we prove $\omega > \frac{\pi}{4}$ in D_ϵ using method of contradiction. Let us assume that there exists a point G such that $\omega_G = \frac{\pi}{4}$. Then using (2.5) we observe that $\bar{\partial}_+\omega|_G > 0$ which provides a contradiction, since $\omega|_{\overline{AB}} > \frac{\pi}{4}$. Hence we have $\omega > \frac{\pi}{4}$ in D_ϵ.

Further, the fact $\omega > \frac{\pi}{4}$ and $m(\tau) < 1$ shows that $\Omega(\tau,\omega) < 0$ in D_ϵ. Hence, by characteristic decompositions (2.5) we have

$$\bar{\partial}_+ \alpha > 0, \quad \bar{\partial}_+ \beta < 0, \ \ -\bar{\partial}_- \beta < 0 \text{ in } D_\epsilon.$$

From the boundary data (3.2) we have $-\bar{\partial}_- \alpha|_{\overline{BC}} > 0$. So using characteristic decomposition (2.11) we obtain $-\bar{\partial}_- \alpha > 0$ in the domain D_ϵ.

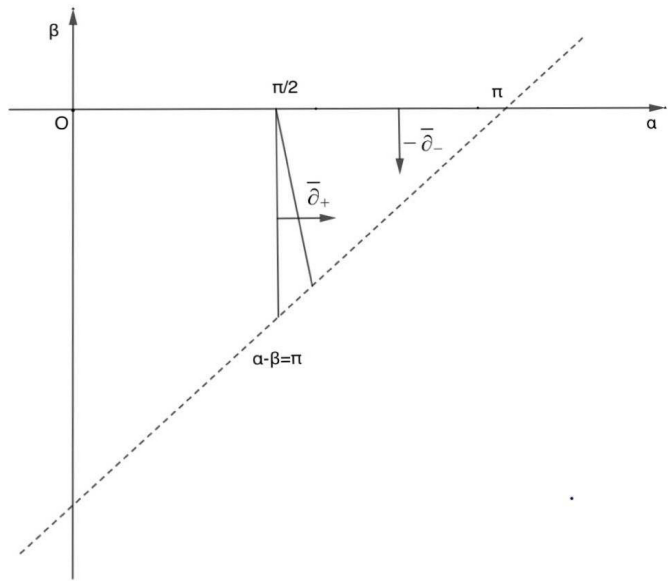

Figure 2: Invariant triangle

Therefore, using $\bar{\partial}_+\alpha > 0$ and $-\bar{\partial}_-\beta < 0$ we obtain the invariant triangle, see Figure 2 (For more details on invariant regions, see [39])

$$\alpha > \pi/2, \quad \beta < 0, \quad \frac{\pi}{4} < \omega < \frac{\pi}{2}.$$

Hence the Lemma is proved. ■

Lemma 3.2. *If the Goursat problem* (2.1)*,* (3.2) *admits a unique C^1 solution in the domain $D_\epsilon, \epsilon \in (\pi/4, \pi/2)$. Then there exist a positive constant $\mathcal{H}$ such that*

$$||(D\alpha, D\beta, Dc)||_{D_\epsilon} < \mathcal{H}. \tag{3.6}$$

Proof. Using the Lemma 3.1, (2.5), relations $\sin\beta\bar{\partial}_+ - \sin\alpha\bar{\partial}_- = -\sin 2\omega\partial_\xi$ and $\cos\beta\bar{\partial}_+ - \cos\alpha\bar{\partial}_- = \sin 2\omega\partial_\eta$, we can easily prove this Lemma. ■

4 Uniform bounds of $\pm\bar{\partial}_\pm c$

In this section, we give uniform lower and upper bounds of $\bar{\partial}_+ c$ and $-\bar{\partial}_- c$ which are useful for further analysis in the succeeding sections.

4.1 Upper bounds of $\pm\bar{\partial}_\pm c$

We provide the upper bounds of $\bar{\partial}_+ c$ and $-\bar{\partial}_- c$ in the following Lemma:

Lemma 4.1. *If the Goursat problem* (2.1)*,* (3.2) *admits a C^1 solution in the domain D_ϵ where $\epsilon \in \left(\frac{\pi}{4}, \frac{\pi}{2}\right)$, then we have*

$$\left(\frac{\bar{\partial}_+ c}{\sin^2\omega}, -\frac{\bar{\partial}_- c}{\sin^2\omega}\right) \in (0, M_\epsilon] \times (0, M_\epsilon] \tag{4.1}$$

where $M_\epsilon = \max\left\{\sup_{\overline{BA_\epsilon}}\left(\frac{\bar{\partial}_+ c}{\sin^2\omega}\right), \sup_{\overline{BC_\epsilon}}\left(\frac{-\bar{\partial}_- c}{\sin^2\omega}\right)\right\}$ *such that A_ϵ and C_ϵ are points on AB and BC, respectively with $\omega(A_\epsilon) = \omega(C_\epsilon) = \epsilon$.*

Proof. In order to prove this Lemma we need to prove that for any $x > 0$ we have

$$\left(\frac{\bar{\partial}_+ c}{\sin^2\omega}, -\frac{\bar{\partial}_- c}{\sin^2\omega}\right) \in (0, M_\epsilon + x) \times (0, M_\epsilon + x) \; in \; D_\epsilon.$$

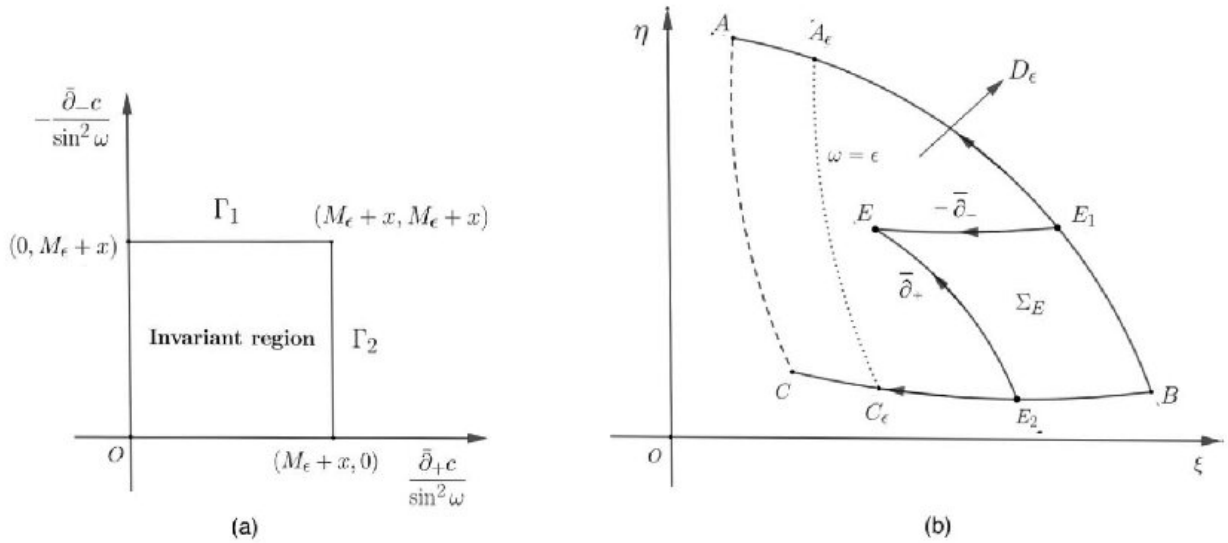

Figure 3: (a) Invariant region of $\left(\dfrac{\bar{\partial}_+ c}{\sin^2\omega}, -\dfrac{\bar{\partial}_- c}{\sin^2\omega}\right)$; (b) Domain Σ_E

In the contrary let us assume that the Lemma is not valid. Then we must have at least one point E in D_ϵ such that $\left(\frac{\bar{\partial}_+ c(E)}{\sin^2\omega}, -\frac{\bar{\partial}_- c(E)}{\sin^2\omega}\right) \in \bigcup_{i=1}^{2} \Gamma_i$ and $\left(\frac{\bar{\partial}_+ c}{\sin^2\omega}, -\frac{\bar{\partial}_- c}{\sin^2\omega}\right) \in (0, M_\epsilon + x) \times (0, M_\epsilon + x)$ for any $(\xi, \eta) \in \Sigma_E/\{E\}$ where $\Gamma_1 = (0, M_\epsilon + x] \times \{M_\epsilon + x\}$ and $\Gamma_2 = \{M_\epsilon + x\} \times (0, M_\epsilon + x]$ with Σ_E being the region bounded by $\overline{BE_1}$, $\overline{BE_2}$, $\overline{EE_1}$ and $\overline{EE_2}$ such that the point E_1 is the point of intersection of the boundary $\overline{AB}$ and the negative characteristic passing through the point E and similarly the point E_2 is the point of intersection of the boundary $\overline{BC}$ and the positive characteristic passing through the point E; see Figure 3. Suppose that $\left(\frac{\bar{\partial}_+ c(E)}{\sin^2\omega}, -\frac{\bar{\partial}_- c(E)}{\sin^2\omega}\right) \in \Gamma_1$, then using (2.9) we have $\bar{\partial}_+ \left(\frac{-\bar{\partial}_- c(E)}{\sin^2\omega}\right) < 0$ which leads to a contradiction since $\frac{-\bar{\partial}_- c(E)}{\sin^2\omega} = \{M_\epsilon + x\}$. Similarly, if $\left(\frac{\bar{\partial}_+ c(E)}{\sin^2\omega}, -\frac{\bar{\partial}_- c(E)}{\sin^2\omega}\right) \in \Gamma_2$, then again by exploiting (2.10), we have $\bar{\partial}_- \left(\frac{\bar{\partial}_+ c(E)}{\sin^2\omega}\right) < 0$ which leads to a contradiction since $\frac{\bar{\partial}_+ c(E)}{\sin^2\omega} = \{M_\epsilon + x\}$. Therefore, our assumption is wrong which proves the Lemma. ■

4.2 Lower bounds of $\pm\bar{\partial}_\pm c$

In the following Lemma we find the lower bounds of $\dfrac{\bar{\partial}_+ c}{c}$ and $-\dfrac{\bar{\partial}_- c}{c}$ which directly provides us lower bounds of $\bar{\partial}_+ c$ and $-\bar{\partial}_- c$.

Lemma 4.2. *If the Goursat problem* (2.1)*,* (3.2) *admits a C^1 solution in the domain D_ϵ then the functions $\frac{\bar{\partial}_+ c}{c}$ and $\frac{\bar{\partial}_- c}{c}$ satisfy*

$$0 < \overline{m} e^{-\hat{\kappa} d} \leq \frac{\bar{\partial}_+ c}{c}, \quad 0 < \bar{m} e^{-\hat{\kappa} d} \leq -\frac{\bar{\partial}_- c}{c}$$

where $2\overline{m} = \min\{\min_{\overline{BA_*}} \frac{\bar{\partial}_+ c}{c}, \min_{\overline{BC_*}} (-\frac{\bar{\partial}_- c}{c})\} > 0$, d is the diameter of the domain D_ϵ, $\hat{\kappa}(\tau) = \dfrac{3 + 4\kappa(\tau)}{2c_4}$, A_* is the point of intersection of negative characteristic and the boundary $\overline{BA}$ and C_* is the point of intersection of positive characteristic and the boundary $\overline{BC}$ such that both the characteristic curves start from a single point P in the domain D_ϵ.

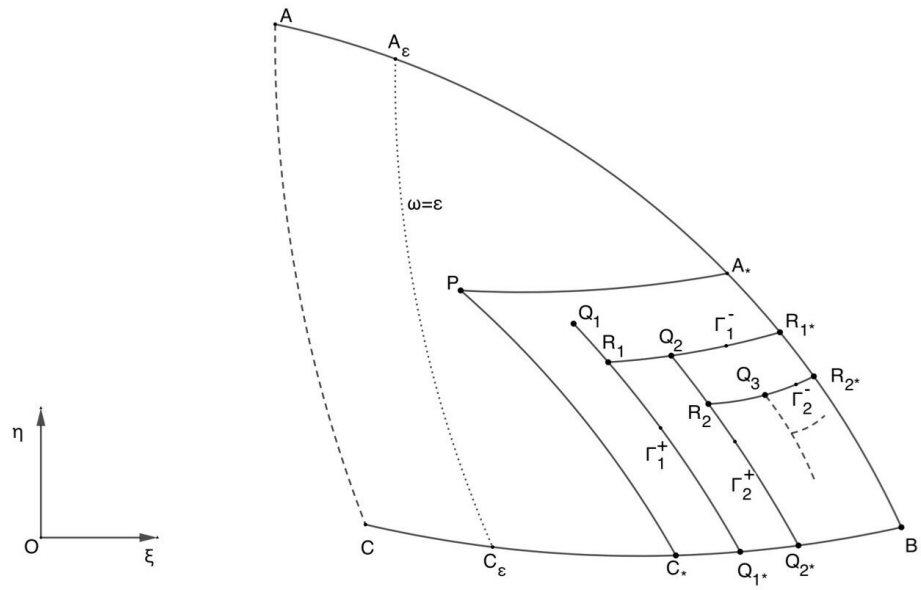

Figure 4: Characteristic curves passing through different points in D_ϵ

Proof. The uniform lower bounds of $\dfrac{\bar{\partial}_+ c}{c}$ and $-\dfrac{\bar{\partial}_- c}{c}$ are established using the new variables

$$\overline{R} = A(\kappa)\sin\omega\sqrt{1+\kappa(\tau)\sin^2\omega}\,\frac{\bar{\partial}_+ c}{c} > 0, \quad \overline{S} = -A(\kappa)\sin\omega\sqrt{1+\kappa(\tau)\sin^2\omega}\,\frac{\bar{\partial}_- c}{c} > 0 \tag{4.2}$$

where $A(\kappa(\tau)) = \kappa(\tau)\exp\left(\int \dfrac{-\kappa'(\tau)\sin^2\omega}{2(1+\kappa(\tau)\sin^2\omega)}d\tau\right) > 0$ in the region D_ϵ.

Then using (2.7) and (2.8) we obtain

$$\bar{\partial}_- \overline{R} = \overline{R}\Pi, \qquad \bar{\partial}_+ \overline{S} = \overline{S}\Pi \tag{4.3}$$

where

$$\Pi = \frac{(\overline{R}-\overline{S})(1+\kappa(\tau))}{A(\kappa(\tau))\sin 2\omega\cos\omega\sqrt{1+\kappa(\tau)\sin^2\omega}} + \frac{\sin 2\omega}{2c}\left(\frac{3+4\kappa(\tau)\sin^2\omega}{1+\kappa(\tau)\sin^2\omega}\right). \tag{4.4}$$

Now we consider the following two cases.

Case A: Let us assume that $\overline{S} \geq \overline{R}$ holds entirely in the region PA_*BC_*P for each point P.

Then using (4.3) we get

$$\bar{\partial}_- \ln\overline{R} \leq \frac{3+4\kappa(\tau)}{2c} \leq \frac{3+4\kappa(\tau)}{2c_4} = \hat{\kappa}(\tau). \tag{4.5}$$

Then integrating (4.5) along the negative characteristic from A_* to P yields

$$\overline{S}_P > \overline{R}_P \geq \overline{R}_{A_*} e^{-\hat{\kappa}(\eta_P - \eta_{A_*})} \geq \overline{m} e^{-\hat{\kappa} d}.$$

Case B: Let us assume that there exists a point Q_1 in PA_*BC_*P such that $\overline{S} < \overline{R}$ at Q_1. Now we draw a positive characteristic curve Γ_1^+ starting from Q_1 to Q_{1*} which lies on the boundary $\overline{BC_*}$.

If $\Pi \geq 0$ for all the points on Γ_1^+ then using (4.3) we have

$$\bar{\partial}_+ \overline{S} > 0 \qquad on \quad \Gamma_1^+$$

which implies that

$$\overline{R}_{Q_1} > \overline{S}_{Q_1} \geq \overline{S}_{Q_{1*}} \geq \overline{m} \geq \overline{m}e^{-\hat{\kappa}d}.$$

Otherwise there exists a point on Γ_1^+ such that $\Pi < 0$ at that point. But $\Pi > 0$ at Q_1 so we use continuity of Π to see that $\Pi > 0$ holds for all points in $N_1 \cap \Gamma_1^+$ for some neighbourhood N_1 of Q_1 and $\Pi = 0$ at $R_1 = \partial N_1 \cap \Gamma_1^+$.

So we see that

$$\bar{\partial}_+ \overline{S} > 0 \text{ on } N_1 \cap \Gamma_1^+,$$

which gives

$$\overline{R}_{Q_1} > \overline{S}_{Q_1} > \overline{S}_{R_1} > \overline{R}_{R_1}. \tag{4.6}$$

The last inequality holds because of the fact $\Pi = 0$ at $R_1 = \partial N_1 \cap \Gamma_1^+$.

Now we draw a negative characteristic Γ_1^- from R_1 to R_{1*} on the boundary $\overline{BA_*}$. We further investigate the analysis of this case by considering the following two subcases.

Subcase i : Assume that $\overline{S} \geq \overline{R}$ holds on every point of Γ_1^- then using $\bar{\partial}_- \overline{R} = \overline{R}\Pi$ leads to

$$-\bar{\partial}_- \ln \overline{R} \geq -\hat{\kappa}.$$

Integrating the above from R_{1*} to R_1 we obtain

$$\overline{R}_{R_1} \geq \overline{R}_{R_{1*}} e^{-\hat{\kappa}d} \geq \overline{m}e^{-\hat{\kappa}d}. \tag{4.7}$$

By using (4.6) and (4.7) we have

$$\overline{R}_{Q_1} > \overline{S}_{Q_1} \geq \overline{m}e^{-\hat{\kappa}d}. \tag{4.8}$$

Subcase ii: Assume that $\overline{S} < \overline{R}$ holds for some point on Γ_1^-. Then using the fact $\overline{S} > \overline{R}$ at R_1 we observe that $\overline{S} > \overline{R}$ holds for all the points in $N_2 \cap \Gamma_1^-$ for some neighbourhood N_2 of R_1 and $\overline{S} = \overline{R}$ at $Q_2 = \partial N_2 \cap \Gamma_1^-$.

Then integrating (4.3) along negative characteristic from Q_2 to R_1 and using (4.6) yields

$$\overline{R}_{Q_1} > \overline{S}_{Q_1} > \overline{S}_{R_1} > \overline{R}_{R_1} \geq \overline{R}_{Q_2} e^{-\hat{\kappa}d} = \overline{S}_{Q_2} e^{-\hat{\kappa}d}. \tag{4.9}$$

Now from Q_2 we draw a positive characteristic Γ_2^+ up to Q_2^* on the boundary $\overline{BC_*}$. At Q_2 we have $\Pi > 0$. Again, if $\Pi \geq 0$ holds on Γ_2^+ completely then

$$\overline{S}_{Q_2} > \overline{S}_{Q_2^*} \geq \overline{m},$$

which in the view of (4.9) gives

$$\overline{R}_{Q_1} > \overline{S}_{Q_1} \geq \overline{m}e^{-\hat{\kappa}d}.$$

Otherwise we have a point on Γ_2^+ such that $\Pi < 0$ at that point and $\bar{\partial}_+ S > 0$ or $\overline{S}_{Q_2} > \overline{S}_{R_2}$ in the neighbourhood of Q_2 where R_2 is the point on Γ_2^+ such that $\Pi > 0$ on $\overline{Q_2 R_2} \cap \Gamma_2^+$ and $\Pi = 0$ at R_2. Again using (4.3) and (4.9) yields

$$\overline{R}_{Q_1} > \overline{S}_{Q_1} \geq \overline{S}_{R_2} e^{-\hat{\kappa}d}.$$

Since at R_2, $\Pi = 0$ so we have

$$\overline{R}_{R_2} < \overline{S}_{R_2}.$$

Then we draw a negative characteristic from R_2. The repetition of the above process completes the proof of the Lemma. ■

5 Existence of global solution

In this section, we try to extend our ideas to obtain the global solution from the local solution by solving many local Goursat problems in each step of extension. Let us assume that the Goursat problem (2.1), (3.2) admits a unique C^1 solution in D_ϵ. Let $\overline{XZ}$ and $\overline{XY}$ be positive($C+$) and negative($C-$) characteristics in D_ϵ, respectively. Then, we prescribe

$$(\alpha, \beta, c) = \begin{cases} (\alpha|_{XZ}, \beta|_{XZ}, c|_{XZ}), & on \quad \overline{XZ} \\ (\alpha|_{XY}, \beta|_{XY}, c|_{XY}), & on \quad \overline{XY} \end{cases} \tag{5.1}$$

where $(\alpha|_{XY}, \beta|_{XY}, c|_{XY})$ and $(\alpha|_{XZ}, \beta|_{XZ}, c|_{XZ})$ are the values of the solution (α, β, c) on $\overline{XY}$ and $\overline{XZ}$, respectively.

We then have the following Lemma.

Lemma 5.1. *(Curved quadrilateral building block) If the arc lengths of $\overline{XY}$ and $\overline{XZ}$ are less than ν_0 where $\nu_0 = \frac{c_4 \sin\left(\frac{\pi}{2}-\epsilon\right)}{3M_\epsilon \tan^2\left(\frac{\pi}{4}+\frac{\epsilon}{2}\right)} \left(\frac{\pi}{4} - \frac{\epsilon}{2}\right) \mu^2(\tau)$, then the Goursat problem* (2.1), (5.1) *admits a global C^1 solution on a curved quadrilateral domain bounded by $\overline{XY}, \overline{XZ}, \overline{TY}$ and $\overline{TZ}$ where $\overline{TY}$ is the positive characteristic passing through Y, $\overline{TZ}$ is the negative characteristic passing through Z. Further, this solution satisfies $\epsilon < \omega < \frac{\pi}{4} + \frac{\epsilon}{2}$.*

Proof. We know by Lemma 4.1 that $\sup\limits_{\overline{XZ}} \left(\frac{\bar{\partial}_+ c}{\sin^2\omega}\right) \leq M_\epsilon$ and $\sup\limits_{\overline{XY}} \left(\frac{-\bar{\partial}_- c}{\sin^2\omega}\right) \leq M_\epsilon$. Then using a similar argument as in the proof of Lemma 4.1, one can prove that the solution of Goursat problem (2.1), (5.1) in the quadrilateral region bounded by $\overline{XY}, \overline{XZ}, \overline{TY}$ and $\overline{TZ}$ satisfies Lemma 3.1 and

$$(\bar{\partial}_+ c, -\bar{\partial}_- c) \in (0, M_\epsilon] \times (0, M_\epsilon]. \tag{5.2}$$

Thus using (2.5) we can easily obtain

$$0 < \bar{\partial}_+ \alpha \leq \frac{M_\epsilon \tan^2\omega}{2\mu^2(\tau)c_4}, \quad -\frac{M_\epsilon \tan^2\omega}{2\mu^2(\tau)c_4} \leq -\bar{\partial}_- \beta < 0. \tag{5.3}$$

We now prove that, when the arc lengths of $\overline{XZ}$ and $\overline{XY}$ are less than ν_0 the solution of the Goursat problem satisfies

$$\omega < \frac{\pi}{4} + \frac{\epsilon}{2}, \qquad 0 < \bar{\partial}_+ \alpha \leq \frac{M_\epsilon \tan^2(\frac{\pi}{4}+\frac{\epsilon}{2})}{2\mu^2(\tau)c_4}, \quad -\frac{M_\epsilon \tan^2(\frac{\pi}{4}+\frac{\epsilon}{2})}{2\mu^2(\tau)c_4} \leq -\bar{\partial}_- \beta < 0. \tag{5.4}$$

We prove it using the method of contradiction. Let us consider an arbitrary point H in the domain of the solution of Goursat problem such that $\omega(H) = \left(\frac{\pi}{4} + \frac{\epsilon}{2}\right)$ and let the positive characteristic passing through H intersects the boundary $\overline{XY}$ at a point H_1 and negative characteristic passing through H intersects the boundary $\overline{XZ}$ at a point H_2. We draw a straight line passing through H_1 having a slope $\tan\alpha(H)$ and another straight line with slope $\tan\beta(H)$ passing through H_2. Let us consider that these two lines intersect at a point J; see Figure 5. By the estimate (5.3) we see that the arcs $\overline{HH_1}$ and $\overline{HH_2}$ lie inside the triangle JH_1H_2. Also, their arc lengths are less than the sum of the arc lengths of $\overline{JH_1}, \overline{JH_2}$ and $\overline{H_1H_2}$. Therefore the arc lengths of HH_1 and HH_2 are less than $\frac{6\nu_0}{\sin(\frac{\pi}{2}-\epsilon)}$.

Then we integrate (5.3) from H_1 to H along positive characteristic and from H to H_2 along negative characteristic to obtain

$$\alpha(H) < \alpha(H_1) + \left(\frac{M_\epsilon \tan^2\left(\frac{\pi}{4}+\frac{\epsilon}{2}\right)}{2\mu^2(\tau)c_4}\right)\left(\frac{6\nu_0}{\sin(\frac{\pi}{2}-\epsilon)}\right) < \alpha(X) + \frac{\pi}{4} - \frac{\epsilon}{2} \tag{5.5}$$

$$\beta(H) > \beta(H_2) - \left(\frac{M_\epsilon \tan^2\left(\frac{\pi}{4}+\frac{\epsilon}{2}\right)}{2\mu^2(\tau)c_4}\right)\left(\frac{6\nu_0}{\sin(\frac{\pi}{2}-\epsilon)}\right) > \beta(X) - \frac{\pi}{4} + \frac{\epsilon}{2} \tag{5.6}$$

Thus, we have $\omega(H) < \frac{\pi}{4} + \frac{\epsilon}{2}$ which leads to contradiction.

In order to obtain a priori uniform C^1 norm estimates of the solution to the Goursat problem we follow the ideas used in the proof of the Lemma 3.1 and 3.2. Hence using the theory of global classical solutions for quasilinear hyperbolic equations we can obtain the proof of the Lemma 5.1 [40]. ■

Theorem 5.1. *(Global solution) The semi-hyperbolic patch problem with the boundary data* (3.2) *admits a unique global C^1 solution in the region ABC where the curve $\overline{AC}$ is sonic.*

Proof. Let $Y_0 = C_\epsilon, Y_1, Y_2, Y_3, ..., Y_n = A_\epsilon$ be $n+1$ different points on the level curve $\omega = \epsilon$. From the point Y_i we draw a C_+ characteristic curve which intersects the C_- characteristic curve passing through Y_{i+1} at a point X_i, where $i = 0, 1, 2, ..., n-1$. Due to the fact $\bar{\partial}_\pm \omega \neq 0$, the level curve $\omega = \epsilon$ is a non-characteristic curve. Hence, $X_i \neq Y_i$ and $X_i \neq Y_{i+1}$ for any $i = 0, 1, 2, ..., n-1$. For sufficiently close Y_i and Y_{i+1}, the arc lengths of $\overline{X_iY_i}$ and $\overline{X_iY_{i+1}}$ are less than ν_0. Therefore, using Lemma 5.1, we know that the Goursat problem with the characteristic boundaries $\overline{X_iY_i}$ and $\overline{X_iY_{i+1}}$ admits a C^1 solution in the quadrilateral domain bounded by $\overline{X_iY_i}, \overline{X_iY_{i+1}}, \overline{Y_iZ_{i+1}}$ and $\overline{Y_{i+1}Z_{i+1}}$ where $\overline{Y_iZ_{i+1}}$ is the C_- characteristic curve passing through Y_i and $\overline{Y_{i+1}Z_{i+1}}$ is the C_+ characteristic curve passing through Y_{i+1}.

Let $Z_0 = A$ and $Z_{n+1} = C$, then for every $i = 0, 1, 2, ..., n$, there exists a ω_i, $\epsilon < \omega_i < \frac{\pi}{2}$, such that the Goursat problem for system (2.1) admits a unique C^1 solution in the domain closed by $\overline{Y_iZ_{i+1}}$, $\overline{Y_iZ_i}$ and the level curve $\omega(\xi, \eta) = \omega_i$ with $\overline{Y_iZ_i}$ and $\overline{Y_iZ_{i+1}}$ as the characteristic boundaries. Let $\omega_e = \min\{\omega_0, \omega_1, \omega_2, ..., \omega_n, \omega(Z_1), \omega(Z_2), ..., \omega(Z_n)\}$. Using the fact $\bar{\partial}_+ \omega > 0$ we see that $\omega_e > \epsilon$. Then we construct the solution of Goursat problem in the domain D_{ω_e}. Repeating the same process, we can construct the global solution in the whole domain ABC which proves the theorem. ■

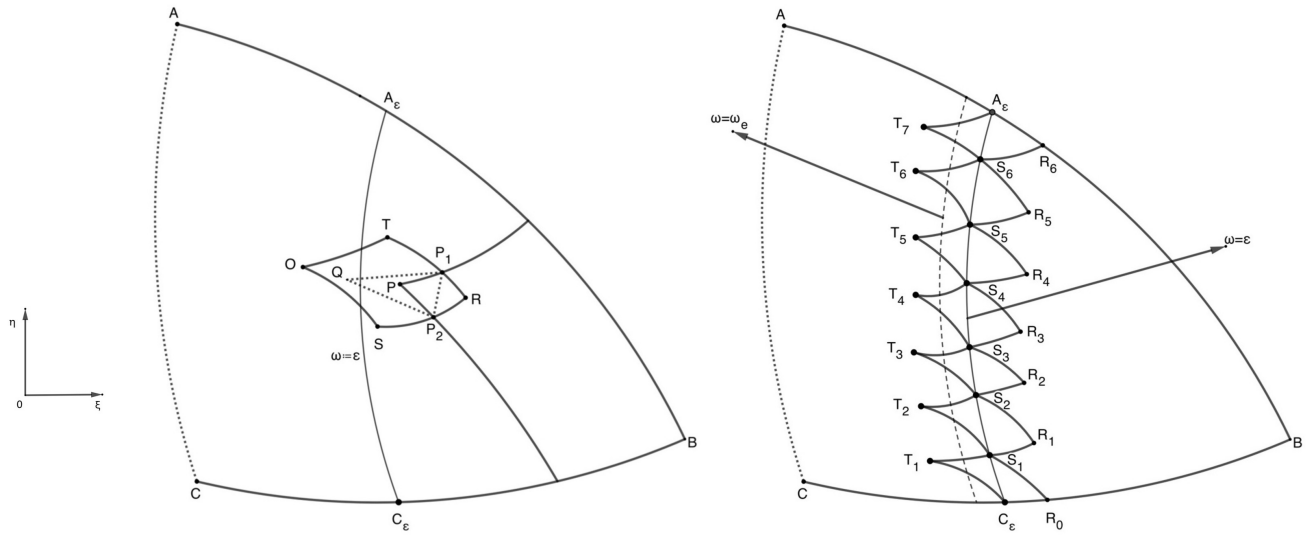

Figure 5: Left: A curved quadrilateral building block; Right: Global solution

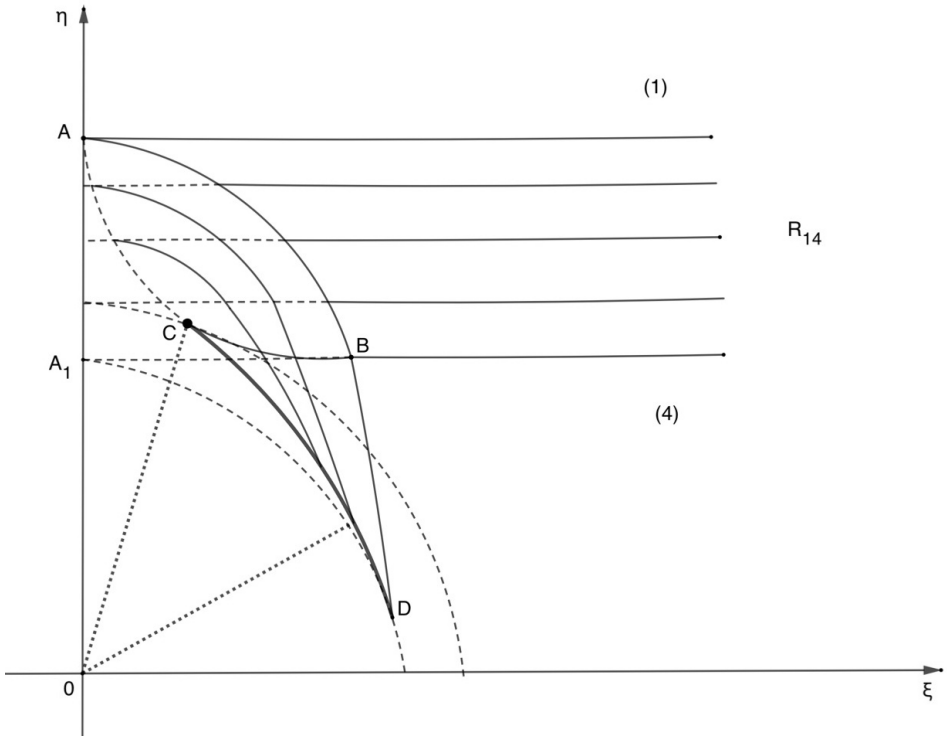

Figure 6: Envelope formation

6 Shock formation

In this section, we discuss the formation of the envelope for positive characteristics passing through strictly convex curve $\overline{BC}$. Further, we prove that the envelope forms before the sonic points of positive characteristics.

Theorem 6.1. *(Envelope formation) For a given strictly monotonically convex curve $\overline{BC}$, we draw the positive characteristics passing through the curve $\overline{BC}$ which are moving towards downward; see Figure 6. Then positive characteristics form an envelope before their sonic points.*

Proof. We exploit (2.6) to prove this theorem. Since $\bar{\partial}_+ c = 0$ in the region of simple waves with the positive characteristics, so from (2.6) we obtain

$$\bar{\partial}_+ \bar{\partial}_- c = \frac{\sin 2\omega}{c} \bar{\partial}_- c + \frac{(\bar{\partial}_- c)^2}{2\mu^2(\tau) c \cos^2 \omega}.$$

So that

$$-\bar{\partial}_+ \left(\frac{1}{-\bar{\partial}_- c} \right) = \frac{\sin 2\omega}{c} \left(\frac{1}{-\bar{\partial}_- c} \right) - \frac{1}{2\mu^2(\tau) c \cos^2 \omega}, \tag{6.1}$$

which can be written as

$$-\bar{\partial}_+ \left(\frac{1}{-\bar{\partial}_- c} \exp\left(\int_{BD} \frac{\sin 2\omega}{c} ds \right) \right) = -\frac{1}{2\mu^2(\tau) c \cos^2 \omega} \exp\left(\int_{BD} \frac{\sin 2\omega}{c} ds \right). \tag{6.2}$$

Using the boundedness of $\sin 2\omega$ and c, we see that $\exp\left(\int_{BD} \frac{\sin 2\omega}{c} ds \right)$ remains bounded on the characteristic extension $\overline{BD}$ which means that the right hand side of (6.2) remains negative while on the boundary $\overline{BC}$ we have $\frac{1}{-\bar{\partial}_- c} > 0$. Which clearly shows that the function $\frac{1}{-\bar{\partial}_- c}$ is decreasing along the positive characteristics in the direction from B to D. Further, the R.H.S of (6.2) blows up quadratically at least as shown in [8]. So $1/(-\bar{\partial}_- c)$ approaches to zero before the characteristic reaches to its sonic point which means that positive characteristics form an envelope before their sonic points. ■

7 Characteristic decompositions and regularity in partial hodograph plane

We use the partial hodograph mapping $(\xi, \eta) \longrightarrow (z, t)$ as in [18]. We define

$$t = \cos \omega(\xi, \eta), \quad z = \phi(\xi, \eta),$$

where ϕ is the potential function used in pseudo-Bernoulli's law (2.2).

From the definition of transformation we have the Jacobian J as

$$J = \frac{\partial(z, t)}{\partial(\xi, \eta)} = -\frac{(1 + \kappa(\tau) \sin^2 \omega)(\bar{\partial}_+ c - \bar{\partial}_- c)}{2 \cos \omega} \neq 0$$

in the entire domain ABC.

Let us assume that $A'B'C'$ is the image of the domain ABC in the $z - t$ plane. Then, we transform the normalized derivatives in the new coordinate system (z, t). Using the expression of $\bar{\partial}_\pm$ we obtain

$$\begin{aligned} \bar{\partial}_+ &= -\left\{ \frac{(1 + \kappa(\tau)(1 - t^2))(1 - t^2)\bar{\partial}_+ c}{ct} + \frac{\sqrt{(1 - t^2)^3}}{c} \right\} \frac{\partial}{\partial t} + \frac{ct}{\sqrt{1 - t^2}} \frac{\partial}{\partial z}, \\ \bar{\partial}_- &= -\left\{ \frac{(1 + \kappa(\tau)(1 - t^2))(1 - t^2)\bar{\partial}_- c}{ct} + \frac{\sqrt{(1 - t^2)^3}}{c} \right\} \frac{\partial}{\partial t} + \frac{ct}{\sqrt{1 - t^2}} \frac{\partial}{\partial z}. \end{aligned} \tag{7.1}$$

Using (7.1) we obtain

$$c_t = \frac{-ct}{(1 + \kappa(\tau)(1 - t^2))(1 - t^2)}, \qquad c_z = \frac{t^2 - 1}{c(1 + \kappa(\tau)(1 - t^2))}. \tag{7.2}$$

Using the uniform boundedness of c, $\kappa(\tau)$ and $t = \cos \omega$, we can verify that c_t and c_z are also uniformly bounded (Recall $c_4 < c < c_1$).

For convenience in the further calculations, we use $R(z, t) = \dfrac{\bar{\partial}_+ c}{c}$ and $S(z, t) = \dfrac{\bar{\partial}_- c}{c}$.

By exploiting (7.1) in (2.7) and (2.8) we have

$$\begin{cases} R_t - \dfrac{cft^2}{S - tg} R_z = \dfrac{-fR\sqrt{1 - t^2}}{S - tg} \left\{ \dfrac{2t^2\sqrt{1 - t^2}}{c} + \dfrac{R + S}{2\mu^2 t} + \Big\{ \tau\kappa'(\tau) - (1 + 2\kappa(\tau)(1 - t^2)) \Big\} St \right\}, \\ S_t - \dfrac{cft^2}{R - tg} S_z = \dfrac{-fS\sqrt{1 - t^2}}{R - tg} \left\{ \dfrac{2t^2\sqrt{1 - t^2}}{c} + \dfrac{R + S}{2\mu^2 t} + \Big\{ \tau\kappa'(\tau) - (1 + 2\kappa(\tau)(1 - t^2)) \Big\} Rt \right\}, \end{cases} \tag{7.3}$$

where $f(t,\tau)=\dfrac{1}{(1+\kappa(\tau)(1-t^2))\sqrt{(1-t^2)^3}}$ and $g(t,\tau)=\dfrac{-(1-t^2)^2 f}{c}$.

We directly compute

$$f_t=\left(5\kappa(\tau)t\sqrt{(1-t^2)^3}+3t\sqrt{1-t^2}-\kappa'(\tau)(1-t^2)^{\frac{5}{2}}\tau_t\right)f^2,\quad f_z=-(1-t^2)^{\frac{5}{2}}f^2\kappa'(\tau)\tau_z,$$
$$g_t=\frac{4t(1-t^2)f-(1-t^2)^2 f_t}{c}+\frac{(1-t^2)^2 f}{c^2}c_t,\qquad g_z=g\left(\frac{f_z}{f}-\frac{c_z}{c}.\right)$$

where $\tau_t=-\dfrac{\tau\kappa(\tau)}{c}c_t$ and $\tau_z=-\dfrac{\tau\kappa(\tau)}{c}c_z$.

The expressions of $f(t,\tau)$, $g(t,\tau)$, c_t, c_z, τ_t, τ_z, f_t, f_z, g_t and g_z clearly show us that these functions are uniformly bounded in the region $A'B'C'$ near sonic boundary, i.e., $t=0$.

Further, we set

$$\widehat{R}(z,t)=\frac{1}{R(z,t)}\text{ and }\widehat{S}(z,t)=\frac{-1}{S(z,t)}.$$

Using Lemma 4.2 we see that the functions $\widehat{R}$ and $\widehat{S}$ are uniformly bounded up to sonic curve.
Now (7.3) can be transformed as follows:

$$\begin{cases}\widehat{R}_t+\dfrac{cft^2\widehat{S}}{1+tg\widehat{S}}\widehat{R}_z=\dfrac{f\sqrt{1-t^2}}{1+tg\widehat{S}}\left\{\dfrac{\widehat{R}-\widehat{S}}{2\mu^2 t}-\dfrac{2t^2\sqrt{1-t^2}\widehat{R}\widehat{S}}{c}+\Big\{\tau\kappa'(\tau)-(1+2\kappa(\tau)(1-t^2))\Big\}\widehat{R}t\right\},\\ \widehat{S}_t-\dfrac{cft^2\widehat{R}}{1-tg\widehat{R}}\widehat{S}_z=\dfrac{f\sqrt{1-t^2}}{1-tg\widehat{R}}\left\{\dfrac{\widehat{S}-\widehat{R}}{2\mu^2 t}+\dfrac{2t^2\sqrt{1-t^2}\widehat{R}\widehat{S}}{c}+\Big\{\tau\kappa'(\tau)-(1+2\kappa(\tau)(1-t^2))\Big\}\widehat{S}t\right\}.\end{cases}\tag{7.4}$$

We denote

$$\Lambda_+=\frac{cft^2\widehat{S}}{1+tg\widehat{S}},\qquad \Lambda_-=\frac{-cft^2\widehat{R}}{1-tg\widehat{R}}.$$

Further, we denote

$$\partial^\pm=\partial_t+\Lambda_\pm\partial_z,\quad \Xi=\partial^+\widehat{R}-\partial^-\widehat{R},\quad \Theta=\partial^+\widehat{S}-\partial^-\widehat{S}.$$

Then we have

$$\Lambda_+-\Lambda_-=\frac{cf(\widehat{R}+\widehat{S})t^2}{(1-tg\widehat{R})(1+tg\widehat{S})},\quad \widehat{R}_z=\frac{\Xi}{\Lambda_+-\Lambda_-},\quad \widehat{S}_z=\frac{\Theta}{\Lambda_+-\Lambda_-}.\tag{7.5}$$

Now we use the commutator relation [24]

$$\partial^-\partial^+-\partial^+\partial^-=\frac{\partial^-\Lambda_+-\partial^+\Lambda_-}{\Lambda_+-\Lambda_-}(\partial^+-\partial^-),$$

and arrives at

$$\begin{cases}\partial^+\Xi=\dfrac{\partial^-\Lambda_+-\partial^+\Lambda_-}{\Lambda_+-\Lambda_-}\Xi+(\partial^+\partial^+\widehat{R}-\partial^-\partial^+\widehat{R}),\\ \partial^-\Theta=\dfrac{\partial^-\Lambda_+-\partial^+\Lambda_-}{\Lambda_+-\Lambda_-}\Theta+(\partial^+\partial^-\widehat{S}-\partial^-\partial^-\widehat{S}),\end{cases}\tag{7.6}$$

A straightforward calculation leads to

$$\frac{\partial^-\Lambda_+-\partial^+\Lambda_-}{\Lambda_+-\Lambda_-}=\frac{2}{t}+h(z,t),\tag{7.7}$$

where

$$h(z,t)=\frac{f\sqrt{1-t^2}}{(1-tg\widehat{R})(1+tg\widehat{S})}\left\{\frac{(\widehat{R}-\widehat{S})g}{2\mu^2}-\frac{2t^3\sqrt{1-t^2}g\widehat{R}\widehat{S}}{c}+t\Big[\tau\kappa'(\tau)-1-2\kappa(\tau)(1-t^2)\Big]\right\}$$
$$+\frac{(g+tg_t)(\widehat{R}-\widehat{S}+2tg\widehat{R}\widehat{S})}{(1-tg\widehat{R})(1+tg\widehat{S})}+\frac{f_t}{f}+tg+\frac{cft^3g_z\widehat{R}\widehat{S}}{(1-tg\widehat{R})(1+tg\widehat{S})}.$$

Also, we calculate

$$(\partial^+\widehat{R})_z = f_1\widehat{R}_z + f_2\widehat{S}_z + f_3, \tag{7.8}$$

where

$$\begin{aligned}
f_1(z,t) &= \frac{1}{2t} - \frac{(\kappa(\tau)+1)g\widehat{S} - t(1+\kappa(\tau)(2-t^2))(1+tg\widehat{S})}{2(1-t^2)(1+tg\widehat{S})(1+\kappa(\tau)(1-t^2))}, \\
&\quad + \frac{f\sqrt{1-t^2}}{1+tg\widehat{S}}\left[t(\tau\kappa'(\tau)-1-2\kappa(\tau)(1-t^2)) - \frac{2t^2\sqrt{1-t^2}\widehat{S}}{c}\right] \\
f_2(z,t) &= \frac{-1}{2t} + \frac{(\kappa(\tau)+1)g\widehat{S} - t(1+\kappa(\tau)(2-t^2))(1+tg\widehat{S})}{2(1+\kappa(\tau)(1-t^2))(1-t^2)(1+tg\widehat{S})} - \frac{2t^2 f(1-t^2)\widehat{R}}{c(1+tg\widehat{S})} \\
&\quad - \frac{fg\sqrt{1-t^2}}{(1+tg\widehat{S})^2}\left[\frac{\widehat{R}-\widehat{S}}{2\mu^2} - \frac{2t^3\sqrt{1-t^2}\widehat{R}\widehat{S}}{c} + \left(\tau\kappa'(\tau) - \left(1+2\kappa(\tau)(1-t^2)\right)\right)\widehat{R}t^2\right], \\
f_3(z,t) &= \frac{(\widehat{R}-\widehat{S})}{2t}\left(\frac{\kappa'(\tau)\tau_z}{1+\kappa(\tau)} + \frac{f_z}{f(1+tg\widehat{S})}\right) \\
&\quad + (\widehat{S}-\widehat{R})\left(\frac{\kappa'(\tau)\tau_z}{1+\kappa(\tau)} + \frac{f_z}{f(1+tg\widehat{S})}\right)\left[\frac{(\kappa(\tau)+1)g\widehat{S} - t(1+\kappa(\tau)(2-t^2))(1+tg\widehat{S})}{2(1+\kappa(\tau)(1-t^2))(1-t^2)(1+tg\widehat{S})}\right] \\
&\quad + \frac{f\sqrt{1-t^2}}{1+tg\widehat{S}}\left[-\frac{2t^2\sqrt{1-t^2}\widehat{R}\widehat{S}}{\tau\kappa(\tau)c} + \widehat{R}t\Big[\kappa'(\tau)(2t^2-1) + \tau\kappa''(\tau)\Big]\right]\tau_z \\
&\quad + \frac{f_z\sqrt{1-t^2}}{(1+tg\widehat{S})^2}\left[-\frac{2t^2\sqrt{1-t^2}\widehat{R}\widehat{S}}{c} + \Big[\tau\kappa'(\tau) - \left(1+2\kappa(\tau)(1-t^2)\right)\Big]\widehat{R}t\right] \\
&\quad + \frac{fg\widehat{S}\sqrt{1-t^2}}{c(1+tg\widehat{S})^2}\left[\frac{\widehat{R}-\widehat{S}}{2\mu^2} - \frac{2t^3\sqrt{1-t^2}\widehat{R}\widehat{S}}{c} + \Big[\tau\kappa'(\tau) - \left(1+2\kappa(\tau)(1-t^2)\right)\Big]\widehat{R}t^2\right]c_z.
\end{aligned}$$

Similarly

$$(\partial^-\widehat{S})_z = g_1\widehat{S}_z + g_2\widehat{R}_z + g_3, \tag{7.9}$$

where

$$\begin{aligned}
g_1(z,t) &= \frac{1}{2t} + \frac{(\kappa(\tau)+1)g\widehat{R} + t\left(1+\kappa(\tau)(2-t^2)\right)(1-tg\widehat{R})}{2(1-t^2)(1-tg\widehat{R})\,(1+\kappa(\tau)(1-t^2))} \\
&\quad + \frac{f\sqrt{1-t^2}}{1-tg\widehat{R}}\left[t\left(\tau\kappa'(\tau)-1-2\kappa(\tau)(1-t^2)\right) + \frac{2t^2\sqrt{1-t^2}\widehat{R}}{c}\right], \\
g_2(z,t) &= -\frac{1}{2t} - \frac{(\kappa(\tau)+1)g\widehat{R} + t\left(1+2\kappa(\tau)(2-t^2)\right)(1-tg\widehat{R})}{2(1-t^2)(1-tg\widehat{R})\,(1+\kappa(\tau)(1-t^2))} + \frac{2t^2 f(1-t^2)\widehat{S}}{c(1-tg\widehat{R})} \\
&\quad - \frac{fg\sqrt{1-t^2}}{(1-tg\widehat{R})^2}\left[\frac{\widehat{R}-\widehat{S}}{2\mu^2} - \frac{2t^3\sqrt{1-t^2}\widehat{R}\widehat{S}}{c} - \left(\tau\kappa'(\tau) - \left(1+2\kappa(\tau)(1-t^2)\right)\right)\widehat{S}t^2\right], \\
g_3(z,t) &= \frac{\widehat{S}-\widehat{R}}{2t}\left(\frac{\kappa'(\tau)\tau_z}{1+\kappa(\tau)} + \frac{f_z}{f(1-tg\widehat{R})}\right) \\
&\quad + (\widehat{S}-\widehat{R})\left(\frac{\kappa'(\tau)\tau_z}{1+\kappa(\tau)} + \frac{f_z}{f(1-tg\widehat{R})}\right)\left[\frac{(\kappa(\tau)+1)g\widehat{R} + t\left(1+2\kappa(\tau)(2-t^2)\right)(1-tg\widehat{R})}{2(1-t^2)(1-tg\widehat{R})\,(1+2\kappa(\tau)(1-t^2))}\right]
\end{aligned}$$

$$
\begin{aligned}
&+\frac{f\sqrt{1-t^2}}{1-tg\widehat{R}}\left[\frac{2t^2\sqrt{1-t^2}\widehat{R}\widehat{S}}{\tau\kappa(\tau)c}+\widehat{S}t\Big[\kappa'(\tau)(2t^2-1)+\tau\kappa''(\tau)\Big]\right]\tau_z\\
&+\frac{f_z\sqrt{1-t^2}}{(1-tg\widehat{R})^2}\left[\frac{2t^2\sqrt{1-t^2}\widehat{R}\widehat{S}}{c}+\big(\tau\kappa'(\tau)-\big(1+2\kappa(\tau)(1-t^2)\big)\big)\,\widehat{S}t\right]\\
&+\frac{fg\widehat{R}\sqrt{1-t^2}}{c(1-tg\widehat{R})^2}\left[\frac{\widehat{R}-\widehat{S}}{2\mu^2}-\frac{2t^3\sqrt{1-t^2}\widehat{R}\widehat{S}}{c}-\big(\tau\kappa'(\tau)-\big(1+2\kappa(\tau)(1-t^2)\big)\big)\,\widehat{S}t^2\right]c_z.
\end{aligned}
$$

Usage of (7.5) in (7.8) and (7.9) leads to

$$
\begin{cases}
\partial^+\partial^+\widehat{R}-\partial^-\partial^+\widehat{R}=(\Lambda_+-\Lambda_-)(\partial^+\widehat{R})_z=f_1\Xi+f_2\Theta+(\Lambda_+-\Lambda_-)f_3,\\
\partial^+\partial^-\widehat{S}-\partial^-\partial^-\widehat{S}=(\Lambda_+-\Lambda_-)(\partial^-\widehat{S})_z=g_1\Theta+g_2\Xi+(\Lambda_+-\Lambda_-)g_3.
\end{cases}
\tag{7.10}
$$

Thus, exploiting (7.6), (7.7) and (7.10), we obtain

$$
\begin{cases}
\partial^+\Xi=\left(\dfrac{5}{2t}+\hat{f}_1(z,t)\right)\Xi+\hat{f}_2(z,t)\dfrac{\Theta}{2t}+\hat{f}_3(z,t)\dfrac{t}{2},\\
\partial^-\Theta=\left(\dfrac{5}{2t}+\hat{g}_1(z,t)\right)\Theta+\hat{g}_2(z,t)\dfrac{\Xi}{2t}+\hat{g}_3(z,t)\dfrac{t}{2},
\end{cases}
\tag{7.11}
$$

where

$$
\begin{aligned}
\hat{f}_1&=h+\left(f_1-\frac{1}{2t}\right),\quad \hat{f}_2=2tf_2,\quad \hat{f}_3=\frac{2}{t}(\Lambda_+-\Lambda_-)f_3,\\
\hat{g}_1&=h+\left(g_1-\frac{1}{2t}\right),\quad \hat{g}_2=2tg_2,\quad \hat{g}_3=\frac{2}{t}(\Lambda_+-\Lambda_-)g_3.
\end{aligned}
$$

Noting the expressions of h, f_i, g_i $(i=1,2,3)$ and using the Lemma 4.1 and 4.2, we observe that the functions $\hat{f}_1,\hat{f}_2,\hat{f}_3,\hat{g}_1,\hat{g}_2$ and $\hat{g}_3$ are uniformly bounded near sonic boundary, i.e., $t=0$. Also, we see that $\hat{f}_2\to-1,\hat{g}_2\to-1$ as $t\to 0$.

Further, we introduce new variables $\widehat{\Xi}=\dfrac{\Xi}{t},\ \widehat{\Theta}=\dfrac{\Theta}{t}$ to transform the system (7.11) into

$$
\begin{cases}
\partial^+\widehat{\Xi}=\left\{\dfrac{3}{2t}+\hat{f}_1(z,t)\right\}\widehat{\Xi}+\hat{f}_2(z,t)\dfrac{\widehat{\Theta}}{2t}+\dfrac{\hat{f}_3(z,t)}{2},\\[2ex]
\partial^-\widehat{\Theta}=\left\{\dfrac{3}{2t}+\hat{g}_1(z,t)\right\}\widehat{\Theta}+\hat{g}_2(z,t)\dfrac{\widehat{\Xi}}{2t}+\dfrac{\hat{g}_3(z,t)}{2},
\end{cases}
$$

or

$$
\begin{cases}
\partial^+\left(t^{-\frac{3}{2}}\widehat{\Xi}\right)=t^{-\frac{5}{2}}\left\{t\hat{f}_1(z,t)\widehat{\Xi}+\dfrac{1}{2}\hat{f}_2\widehat{\Theta}+\dfrac{t\hat{f}_3(z,t)}{2}\right\},\\[2ex]
\partial^-\left(t^{-\frac{3}{2}}\widehat{\Theta}\right)=t^{-\frac{5}{2}}\left\{t\hat{g}_1(z,t)\widehat{\Theta}+\dfrac{1}{2}\hat{g}_2\widehat{\Xi}+\dfrac{t\hat{g}_3(z,t)}{2}\right\}
\end{cases}.
\tag{7.12}
$$

7.1 Regularity of functions R, S and W in partial hodograph plane

In this subsection, we are interested to establish the regularity of solution near sonic boundary $\overline{AC}$, i.e., near $t=0$. We use (7.12) to derive the regularity results in partial hodograph plane. Let $F=(\phi_1,0)$ be any point on the line segment $\overline{A'C'}$ where $\overline{A'C'}$ is the image of sonic boundary $\overline{AC}$ in $z-t$ plane. We take a new point $I=(\phi_1,t_m)$ where t_m is very small positive number such that $I=(\phi_1,t_m)$ remains in the domain $A'B'C'$. Then from the point I we can draw positive and negative characteristic curves $\phi_+(I)$ and $\phi_-(I)$ up to the line segment $\overline{A'C'}$ at I_1 and I_2, respectively. Since $R,-S$ are uniformly bounded and positive in the domain ABC, we see that the functions $\hat{f}_1,\hat{f}_2,\hat{f}_3,\hat{g}_1,\hat{g}_2$ and $\hat{g}_3$ are uniformly bounded near sonic boundary, i.e., $t=0$ in a small subdomain with $\hat{f}_2\to-1,\ \hat{g}_2\to-1$ as $t\to 0$.

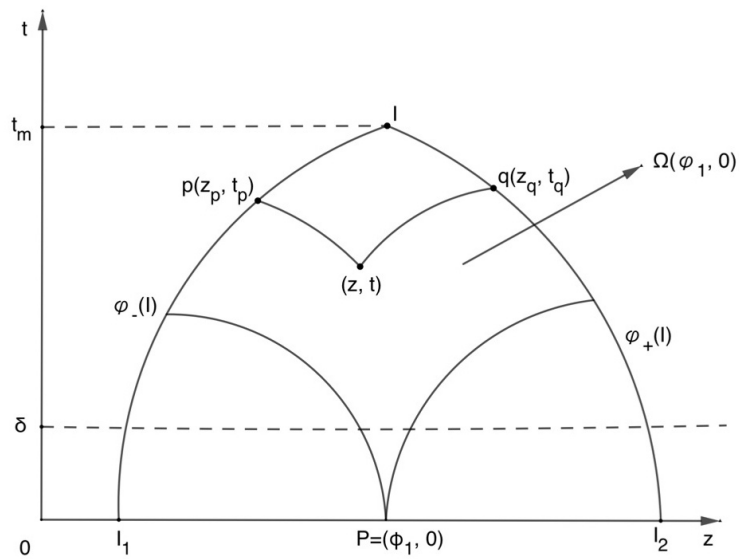

Figure 7: Domain of $\Delta(\phi_1, 0)$.

Then for any constant $\varrho \in (0, 2]$ we can choose sufficiently small $t_m < 1$ such that

$$\begin{aligned} t|\hat{f}_1| \leq \frac{\varrho}{8}, \quad t|\hat{f}_3| \leq \frac{\varrho}{4}, \quad |\hat{f}_2| \leq 1 + \varrho, \\ t|\hat{g}_1| \leq \frac{\varrho}{8}, \quad t|\hat{g}_3| \leq \frac{\varrho}{4}, \quad |\hat{g}_2| \leq 1 + \varrho \end{aligned} \tag{7.13}$$

hold in the domain II_1I_2. Let $\Delta(\phi_1, 0)$ be the domain bounded by II_1, II_2 and the positive and negative characteristics starting from $F = (\phi_1, 0)$. Further, we draw a negative characteristic up to the point $p(z_p, t_p)$ on the boundary II_1 and a positive characteristic up to the point $q(z_q, t_q)$ on the boundary II_2 starting from an arbitrary point (z, t).
Let us denote

$$M = \max\left\{ \max_{\Delta(\phi_1,0)} \left|\widehat{\Xi}(z_q, t_q)\right| + 1, \max_{\Delta(\phi_1,0)} \left|\widehat{\Theta}(z_p, t_p)\right| + 1 \right\}.$$

Since t_p and t_q are strictly positive, so using the definitions of $\widehat{\Xi}$ and $\widehat{\Theta}$ we observe that M is well-defined and uniformly bounded in the domain $\Delta(\phi_1, 0)$.

Now for any fixed $\delta \in (0, t_m)$, define

$$\bar{\Delta}_\delta = \left\{(\phi, t) | \delta \leq t \leq t_m, \phi_-(I) \leq z \leq \phi_+(I)\right\} \cap \Delta(\phi_1, 0);$$

and $M_\delta = \max_{\bar{\Delta}_\delta}\{|t^\varrho \widehat{\Xi}|, |t^\varrho \widehat{\Theta}|\}$. Then we provide the bounds of $|t^\varrho \widehat{\Xi}|$ and $|t^\varrho \widehat{\Theta}|$ in the following Lemma.

Lemma 7.1. *If $(\phi_1, 0)$ is an arbitrary fixed point on the line segment $\overline{A'C'}$ and $\varrho \in (0, 2]$ be any constant. Then there exists a uniform positive constant $\widetilde{M}$ such that the following inequalities hold*

$$\left|t^\varrho \widehat{\Xi}\right| \leq \widetilde{M}, \quad |t^\varrho \widehat{\Theta}| \leq \widetilde{M} \ \ \forall (z, t) \in \Delta(\phi_1, 0).$$

Proof. Suppose that for every $\delta \in (0, t_m)$, $M_\delta \leq M$ then the Lemma holds true. Otherwise, there exists a $\delta_0 \in (0, t_m)$ such that $M_{\delta_0} > M$.

For any point $(z_{\delta_0}, \delta_0) \in \Delta(\phi_1, 0)$, we integrate (7.12) along the positive characteristic from $t(\geq \delta_0)$ to t_q and use (7.13) to obtain

$$
\begin{aligned}
&\left|\frac{\widehat{\Xi}(z,t)}{t^{\frac{3}{2}}}\right| = \left|\frac{\widehat{\Xi}(z_q,t_q)}{t_q^{\frac{3}{2}}} + \int_t^{t_q} \frac{t\hat{f}_1\widehat{\Xi} + \frac{\hat{f}_2}{2}\widehat{\Theta} + \frac{t\hat{f}_3}{2}}{t^{\frac{5}{2}}}dt\right| \\
\leq &\left|\frac{\widehat{\Xi}(z_q,t_q)}{t_q^{\frac{3}{2}}}\right| + \left|\int_t^{t_q} \frac{\left(\frac{\varrho}{8}\right)\widehat{\Xi} + \left(\frac{1+\varrho}{2}\right)\widehat{\Theta} + \frac{\varrho}{8}}{t^{\frac{5}{2}}}dt\right| \leq \left|\frac{\widehat{\Xi}(z_q,t_q)}{t_q^{\frac{3}{2}}}\right| + \frac{2+3\varrho}{4}M_{\delta_0}\int_t^{t_q}\frac{1}{t^{\frac{5}{2}+\varrho}}dt \\
= &\left|\frac{\widehat{\Xi}(z_q,t_q)}{t_q^{\frac{3}{2}}}\right| + \frac{2+3\varrho}{4}M_{\delta_0}\frac{1}{\left(\frac{3}{2}+\varrho\right)}\left(\frac{1}{t^{\frac{3}{2}+\varrho}} - \frac{1}{t_q^{\frac{3}{2}+\varrho}}\right) < \frac{2+3\varrho}{6+4\varrho}M_{\delta_0}t^{-\frac{3}{2}-\varrho} < M_{\delta_0}t^{-\frac{3}{2}-\varrho},
\end{aligned}
$$

which proves the inequality

$$
|\widehat{\Xi}(z,t)|_{t=\delta_0} < M_{\delta_0}{\delta_0}^{-\varrho}, \tag{7.14}
$$

holds on the line segment $\{t=\delta_0\}\cap\bar{\Delta}_{\delta_0}$. Similarly, we can prove that

$$
|\widehat{\Theta}(z,t)|_{t=\delta_0} < M_{\delta_0}{\delta_0}^{-\varrho}. \tag{7.15}
$$

According to (7.14) and (7.15) we notice that $|t^{\varrho}\widehat{\Xi}|$ and $|t^{\varrho}\widehat{\Theta}|$ do not attain the maximum values on the line segment $t=\delta_0$, which means that the maximum value is attained in the interior, i.e., for $\delta_0 < t \leq t_m$ in the domain $\bar{\Delta}_{\delta_0}$. The above assertion holds in a larger domain $\bar{\Delta}_{\delta'}$, where $\delta' < \delta_0$. We can extend the domain larger and larger in each step to the whole domain $\Delta(\phi_1, 0)$ to complete the proof of the Lemma. ■

Next, for any point $(\phi_1, 0) \in \overline{A'C'}$ let r be a positive constant such that $(\phi_1 - r, \phi_1 + r) \subset A'C'$. Further, assume that the intersection points of negative and positive characteristics passing through points $F_1 = (\phi_1 - r, 0)$ and $F_2 = (\phi_1 + r, 0)$ are F_1^* and F_2^*, respectively. Then we can extend the inequality in a larger domain $IF_1^*F_1F_2F_2^*$ using the same arguments as in Lemma 7.1. Then we have the following Lemma.

Lemma 7.2. *If $(\phi_1, 0)$ is an arbitrary fixed point on the line segment $\overline{A'C'}$ and $\varrho \in (1, 2]$ be any constant. Then there exists a uniform positive constant $\widetilde{M}$ depending only on ϱ and r such that the following inequalities hold*

$$
|t^{\varrho}\widehat{\Xi}| \leq \widetilde{M}, \quad |t^{\varrho}\widehat{\Theta}| \leq \widetilde{M} \ \ \forall (z,t) \in IF_1^*F_1F_2F_2^*.
$$

We now prove the uniform boundedness of the function $\widehat{W} = \dfrac{\widehat{R} - \widehat{S}}{t}$.

Lemma 7.3. *The function $\widehat{W}$ is uniformly bounded up to the sonic boundary $A'C'$.*

Proof. We exploit the values of $\widehat{R}_t$, $\widehat{S}_t$, $\widehat{\Xi}$ and $\widehat{\Theta}$ to prove the uniform boundedness of $\widehat{W}$ near sonic boundary, i.e., $t = 0$. Therefore, we compute

$$
\widehat{W}_t = \theta_1\widehat{W} + \theta_2, \tag{7.16}
$$

where

$$
\begin{aligned}
\theta_1 &= \frac{(1+\kappa(\tau))g(\widehat{S}-\widehat{R}) + 2t(1+\kappa(\tau)(2-t^2)) + 2g(1+\kappa(\tau)(1-t^2))(1-t^2)(\widehat{R}-\widehat{S}+tg\widehat{R}\widehat{S})}{2(1-tg\widehat{R})(1+tg\widehat{S})(1+\kappa(\tau)(1-t^2))(1-t^2)}, \\
\theta_2 &= \frac{f\sqrt{1-t^2}}{(1-tg\widehat{R})(1+tg\widehat{S})}\left[(tg(\tilde{R}-\tilde{S})-2)\left\{\frac{2t\sqrt{1-t^2}\widehat{R}\widehat{S}}{c}\right\}\right] \\
&\quad + \frac{f\sqrt{1-t^2}}{(1-tg\widehat{R})(1+tg\widehat{S})}\left[(\tau\kappa'(\tau) - 1 - 2\kappa(\tau)(1-t^2))(\widehat{R}-\widehat{S}-tg(\widehat{R}^2+\widehat{S}^2))\right] \\
&\quad - \left[\frac{\widehat{\Xi}\widehat{S}(1-tg\widehat{R}) + \widehat{\Theta}\widehat{R}(1+tg\widehat{S})}{\widehat{R}+\widehat{S}}\right].
\end{aligned}
$$

For sufficiently small t, we see that θ_1 and θ_2 are uniformly bounded. Thus, integrating (7.16) yields that the function $\widehat{W}$ is uniformly bounded near $t = 0$. ■

Since $\widehat{R}(z,t) = \frac{1}{R(z,t)}$ and $\widehat{S}(z,t) = -\frac{1}{S(z,t)}$ then using the fact that the function $\widehat{W}(z,t) = \frac{\widehat{R}-\widehat{S}}{t}(z,t)$ is uniformly bounded, we can easily obtain the bound of $W(z,t) = \frac{R+S}{t}(z,t)$ which follows that there exists a uniform positive constant M_1 such that

$$\left|\frac{R+S}{t}(z,t)\right| \leq M_1 \quad \forall (z,t) \in A'B'C'. \tag{7.17}$$

So using (7.3) we can prove the uniform boundedness of $|\bar{\partial}^+ R|$ and $|\bar{\partial}^- S|$ in the entire domain $A'B'C'$ including the sonic boundary $\overline{A'C'}$, i.e., there exists a uniform positive constant M_2 such that

$$|\bar{\partial}^+ R| < M_2, \qquad |\bar{\partial}^- S| < M_2 \ \ \forall (z,t) \in A'B'C'. \tag{7.18}$$

We now develop the uniform regularity of functions $R,\ S$ and W in partial hodograph plane up to the degenerate line segment $\overline{A'C'}$.

Lemma 7.4. *The functions $R(z,t),\ S(z,t)$ and $W(z,t)$ are uniformly Lipschitz continuous in the region $A'B'C'$ up to the degenerate line segment $\overline{A'C'}$.*

Proof. Using (7.5) we obtain

$$R_z = \frac{\widehat{\Xi}(R-tg)(S-tg)R^2}{cf(R^2-S^2)}\left(\frac{R+S}{t}\right), \ \ S_z = \frac{\widehat{\Theta}(R-tg)(S-tg)S^2}{cf(S^2-R^2)}\left(\frac{R+S}{t}\right) \tag{7.19}$$

Using (7.17), Lemma 4.1 and Lemma 4.2 we observe that the functions R_z and S_z are uniformly bounded in the domain $A'B'C'$ up to the degenerate line segment $\overline{A'C'}$. Therefore, by (7.18) the functions R_t and S_t are also uniformly bounded in the entire region $A'B'C'$.

These observations implies the uniform Lipschitz continuity of the function $R(z,t)$ in the entire domain $A'B'C'$. Similarly, we can prove the uniform Lipschitz continuity of the function $S(z,t)$ in the whole domain $A'B'C'$.

Now we compute $\bar{\partial}^+ W$ and $\bar{\partial}^- W$ as follows

$$\begin{aligned}\bar{\partial}^+ W = -f\sqrt{1-t^2}&\left\{\frac{2t\sqrt{1-t^2}(R^2+S^2-(R+S)tg)}{c(S-tg)(R-tg)} + \frac{RS\left(\tau\kappa'(\tau)-1-2\kappa(\tau)(1-t^2)\right)(R+S-2tg)}{(R-tg)(S-tg)}\right\}\\ &+\frac{cf(S-R)}{(R-tg)(S-tg)}(tS_z) + \frac{(1+\kappa(\tau)(2-t^2))tW}{(1-t^2)(1+\kappa(\tau)(1-t^2))} - \frac{(1+\kappa(\tau))(R+S-2tg)(W-g)W}{2(1-t^2)(1+\kappa(\tau)(1-t^2))(S-tg)(R-tg)},\end{aligned}$$

and

$$\begin{aligned}\bar{\partial}^- W = -f\sqrt{1-t^2}&\left\{\frac{2t\sqrt{1-t^2}(R^2+S^2-(R+S)tg)}{c(S-tg)(R-tg)} + \frac{RS\left(\tau\kappa'(\tau)-1-2\kappa(\tau)(1-t^2)\right)(R+S-2tg)}{(R-tg)(S-tg)}\right\}\\ &-\frac{cf(S-R)}{(R-tg)(S-tg)}(tR_z) + \frac{(1+\kappa(\tau)(2-t^2))tW}{(1-t^2)(1+\kappa(\tau)(1-t^2))} - \frac{(1+\kappa(\tau))(R+S-2tg)(W-g)W}{2(1-t^2)(1+\kappa(\tau)(1-t^2))(S-tg)(R-tg)},\end{aligned}$$

which clearly indicates that the functions $\bar{\partial}^+ W$ and $\bar{\partial}^- W$ are uniformly bounded in the domain $A'B'C'$ up to the degenerate line segment $\overline{A'C'}$. Therefore, a similar proof as of uniform Lipschitz continuity of the functions R and S provide us the uniform Lipschitz continuity of W in $z-t$ plane. Hence the Lemma is proved. ■

8 Regularity of solution in self-similar plane

Using the results obtained in the preceding section we now prove that the physical variables $(\rho, u, v)(\xi, \eta)$ are uniformly $C^{1,\frac{1}{2}}$ continuous in the region ABC up to the sonic boundary $\overline{AC}$ and also the sonic boundary is $C^{1,\frac{1}{2}}$ continuous.

To check the regularity of solution in the entire region ABC, we first consider the level curves

$$l^{\vartheta}(\xi,\eta) = 1 - \sin\omega = \vartheta,$$

where ϑ is a positive constant. In particular for $\omega = \dfrac{\pi}{2}$, this level curve represents the sonic boundary $\overline{AC}$.

Now exploiting $\bar{\partial}_+$, $\bar{\partial}_-$ and (2.5) we obtain

$$\begin{aligned} l^{\vartheta}_{\xi} &= \frac{\sin\sigma(1+\kappa(\tau)\sin^2\omega)(\bar{\partial}_+c-\bar{\partial}_-c)}{2c} - \frac{\sin\omega\cos\sigma(1+\kappa(\tau)\sin^2\omega)(\bar{\partial}_+c+\bar{\partial}_-c)}{2c\cos\omega} - \frac{\sin^2\omega\cos\sigma}{c} \\ l^{\vartheta}_{\eta} &= \frac{-\cos\sigma(1+\kappa(\tau)\sin^2\omega)(\bar{\partial}_+c-\bar{\partial}_-c)}{2c} - \frac{\sin\sigma\sin\omega(1+\kappa(\tau)\sin^2\omega)(\bar{\partial}_+c+\bar{\partial}_-c)}{2c\cos\omega} - \frac{\sin^2\omega\sin\sigma}{c}. \end{aligned} \tag{8.1}$$

From (8.1) we obtain

$$(l^{\vartheta}_{\xi})^2 + (l^{\vartheta}_{\eta})^2 = \left(\frac{(1+\kappa(\tau)\sin^2\omega)(\bar{\partial}_+c-\bar{\partial}_-c)}{2c}\right)^2 + \left(\frac{\sin\omega(1+\kappa(\tau)\sin^2\omega)(\bar{\partial}_+c-\bar{\partial}_-c)}{2c\cos\omega} + \frac{\sin^2\omega}{c}\right)^2.$$

Hence, by Lemma 4.1 and Lemma 4.2 we have

$$0 < \overline{m}^2 e^{-2\hat{\kappa}d} < (l^{\vartheta}_{\xi})^2 + (l^{\vartheta}_{\eta})^2 \leq (1+\kappa(\tau)M')^2 + \left[\frac{1}{c_4} + \frac{1+\kappa(\tau)}{2}M'\right]^2, \tag{8.2}$$

where M' is a uniform positive constant which is the upper bound of $\frac{\bar{\partial}_+c}{c}$ and $-\frac{\bar{\partial}_-c}{c}$.

Now we prove the regularity result in the following four steps.

8.1 Mapping $(\xi,\eta)\to(z,t)$ is injective

We prove this by the method of contradiction. Let us assume that there exist two distinct points (ξ_1,η_1) and (ξ_2,η_2) in the region ABC such that $t_1=t_2$ and $z_1=z_2$. Which implies that $\cos\omega(\xi_1,\eta_1)=\cos\omega(\xi_2,\eta_2)$ and $\phi(\xi_1,\eta_1)=\phi(\xi_2,\eta_2)$ such that both the points (ξ_1,η_1) and (ξ_2,η_2) lie on the same level curve $l^{\vartheta}=1-\sin\omega(\xi,\eta)=\vartheta\geq 0$. Now from (8.1) we obtain

$$\nabla\phi.(l^{\vartheta}_{\eta}, -l^{\vartheta}_{\xi}) = \frac{c}{\sin\omega}\left\{-\frac{(1+\kappa(\tau)\sin^2\omega(\bar{\partial}_+c-\bar{\partial}_-c)}{2c}\right\} < 0,$$

so $\phi(\xi,\eta)$ is strictly monotonically decreasing along each level curve $l^{\varpi}(\xi,\eta)=\varpi\geq 0$ which contradicts the assumption $\phi(\xi_1,\eta_1)=\phi(\xi_2,\eta_2)$. Hence the mapping is injective.

8.2 Uniform $C^{\frac{1}{2}}$ continuity of the function $\omega(\xi,\eta)$

Using (8.1) we have

$$\cos\omega\omega_{\xi} = -l^{\vartheta}_{\xi}, \;\; \cos\omega\omega_{\eta} = -l^{\vartheta}_{\eta} \tag{8.3}$$

which gives us

$$|\cos\omega\omega_{\xi}| + |\cos\omega\omega_{\eta}| \leq 2(1+\kappa(\tau)M') + \left[\frac{2}{c_4} + (1+\kappa(\tau))M'\right] \leq C_1 \tag{8.4}$$

where C_1 is a positive constant. From (8.4) we obtain

$$\left|\left(\frac{\pi}{2}-\omega\right)\omega_{\xi}\right| + \left|\left(\frac{\pi}{2}-\omega\right)\omega_{\eta}\right| \leq \frac{\frac{\pi}{2}-\omega}{\sin\left(\frac{\pi}{2}-\omega\right)}C_1 \leq 2C_1$$

which follows that the function $(\frac{\pi}{2}-\omega)^2$ is uniformly Lipschitz continuous in (ξ,η) plane, which means that for any two points $T_1=(\xi_1,\eta_1)$ and $T_2=(\xi_2,\eta_2)$ in the domain ABC we have

$$\left|\left(\frac{\pi}{2}-\omega(\xi_2,\eta_2)\right)^2\right| - \left|\left(\frac{\pi}{2}-\omega(\xi_1,\eta_1)\right)^2\right| \leq 2C_1|(\xi_2,\eta_2)-(\xi_1,\eta_1)| \tag{8.5}$$

Since $\frac{\pi}{4}<\omega<\frac{\pi}{2}$, we observe that $\left(\frac{\pi}{2}-\omega(\xi_2,\eta_2)\right)$ and $\left(\frac{\pi}{2}-\omega(\xi_1,\eta_1)\right)$ are positive so that

$$\begin{aligned} &\left|\left(\frac{\pi}{2}-\omega(\xi_2,\eta_2)\right)^2 - \left(\frac{\pi}{2}-\omega(\xi_1,\eta_1)\right)^2\right| \\ &= \left|\left(\frac{\pi}{2}-\omega(\xi_2,\eta_2)\right) - \left(\frac{\pi}{2}-\omega(\xi_1,\eta_1)\right)\right| . \left|\left(\frac{\pi}{2}-\omega(\xi_2,\eta_2)\right) + \left(\frac{\pi}{2}-\omega(\xi_1,\eta_1)\right)\right| \\ &\geq \left|\left(\frac{\pi}{2}-\omega(\xi_2,\eta_2)\right) - \left(\frac{\pi}{2}-\omega(\xi_1,\eta_1)\right)\right| . \left|\left(\frac{\pi}{2}-\omega(\xi_2,\eta_2)\right) - \left(\frac{\pi}{2}-\omega(\xi_1,\eta_1)\right)\right| \\ &= |\omega(\xi_2,\eta_2)-\omega(\xi_1,\eta_1)|^2 \end{aligned}$$

Hence by (8.5), we obtain

$$|\omega(\xi_2,\eta_2)-\omega(\xi_1,\eta_1)| \le \sqrt{2C_1}|(\xi_2,\eta_2)-(\xi_1,\eta_1)|^{\frac{1}{2}} \tag{8.6}$$

which proves the uniform $C^{\frac{1}{2}}$ continuity of the function $\omega(\xi,\eta)$ in the entire domain ABC.

8.3 Uniform regularity of functions $\frac{\bar{\partial}_+ c}{c}, \frac{\bar{\partial}_- c}{c}$ and $\left(\frac{\bar{\partial}_+ c+\bar{\partial}_- c}{c\cos\omega}\right)$ in the entire region ABC of (ξ,η) plane

From subsection 8.1 we know that the mapping $(\xi,\eta)\to(z,t)$ is injective, so for any two distinct points (ξ_1,η_1) and (ξ_2,η_2) we have two different images, say $T_1'=(z_1,t_1)$ and $T_2'=(z_2,t_2)$ in the region $A'B'C'$. Then in this subsection we prove the uniform $C^{\frac{1}{2}}$ continuity of the functions $\widetilde{R}(\xi,\eta):=R(z,t),\ \widetilde{S}(\xi,\eta):=S(z,t)$ and $\widetilde{W}(\xi,\eta):=W(z,t)$ where $\widetilde{R}(\xi,\eta)=\bar{\partial}_+c/c$, $\widetilde{S}(\xi,\eta)=\bar{\partial}_-c/c$ and $\widetilde{W}(\xi,\eta)=(\bar{\partial}_+c+\bar{\partial}_-c)/c\cos\omega$ in $\xi-\eta$ plane.

We use the uniform Lipschitz continuity of $R(z,t)$ from Lemma 7.4 to obtain

$$\begin{aligned}|\widetilde{R}(\xi_2,\eta_2)-\widetilde{R}(\xi_1,\eta_1)| &= |R(z_2,t_2)-R(z_1,t_1)| \le C_2|(z_2,t_2)-(z_1,t_1)| \\ &= C_2\Big\{\left(\cos\omega(\xi_2,\eta_2)-\cos\omega(\xi_1,\eta_1)\right)^2+\left(\phi(\xi_2,\eta_2)-\phi(\xi_1,\eta_1)\right)^2\Big\}^{\frac{1}{2}}\end{aligned} \tag{8.7}$$

for some uniform positive constant C_2.

Now using (8.6) we have

$$\begin{aligned}|\cos\omega(\xi_2,\eta_2)-\cos\omega(\xi_1,\eta_1)| &\le \left|2\sin\left(\frac{\omega(\xi_2,\eta_2)-\omega(\xi_1,\eta_1)}{2}\right)\right| \\ &\le |\omega(\xi_2,\eta_2)-\omega(\xi_1,\eta_1)| \le \sqrt{2C_1}|(\xi_2,\eta_2)-(\xi_1,\eta_1)|^{\frac{1}{2}}.\end{aligned}$$

So, the uniform Lipschitz continuity of potential function $\phi(\xi,\eta)$ in the entire region ABC and (8.7) yields

$$\begin{aligned}|\widetilde{R}(\xi_2,\eta_2)-\widetilde{R}(\xi_1,\eta_1)| &\le C_2\Big\{2C_1|(\xi_2,\eta_2)-(\xi_1,\eta_1)|+C_3^2|(\xi_2,\eta_2)-(\xi_1,\eta_1)|^2\Big\}^{\frac{1}{2}} \\ &\le C_4|(\xi_2,\eta_2)-(\xi_1,\eta_1)|^{\frac{1}{2}}\end{aligned}$$

where C_3 and C_4 are positive constants such that $C_4=\max\{C_2\sqrt{2C_1}, C_2C_3\}$.

The above result concludes the uniform $C^{\frac{1}{2}}$ continuity of the function $\widetilde{R}(\xi,\eta)$ in the entire region ABC. In the same manner, we can prove that the functions $\widetilde{S}(\xi,\eta)$ and $\widetilde{W}(\xi,\eta)$ are also uniformly $C^{\frac{1}{2}}$ continuous.

8.4 Uniform regularity of the solution (ρ,u,v) in the entire region ABC of (ξ,η) plane

Now we derive the uniform regularity of solution (ρ,u,v) and sonic boundary $\overline{AC}$ using the uniform regularity of functions $\widetilde{R},\ \widetilde{S}$ and $\widetilde{W}$ in the entire region ABC in (ξ,η) plane. To prove this we first prove the uniform regularity of $\sigma(\xi,\eta)$.

Using (2.5) we obtain

$$\begin{cases}\sigma_\xi = \dfrac{\sin\sigma\sin\omega}{c}+\dfrac{\left(\sin\sigma\cos\omega(\widetilde{R}+\widetilde{S})-\cos\sigma\sin\omega(\widetilde{R}-\widetilde{S})\right)\kappa(\tau)}{2}, \\ \sigma_\eta = -\dfrac{\cos\sigma\sin\omega}{c}-\dfrac{\left(\cos\sigma\cos\omega(\widetilde{R}+\widetilde{S})+\sin\sigma\sin\omega(\widetilde{R}-\widetilde{S})\right)\kappa(\tau)}{2}\end{cases} \tag{8.8}$$

which clearly shows that the functions $\sigma(\xi,\eta), \cos\sigma(\xi,\eta)$ and $\sin\sigma(\xi,\eta)$ are uniformly Lipschitz continuous in the whole region ABC. Also, using the fact that $\widetilde{R},\widetilde{S},\omega\in C^{\frac{1}{2}}$ and (8.8) we see that $\sigma(\xi,\eta)\in C^{1,\frac{1}{2}}$ and eventually $\cos\sigma(\xi,\eta),\ \sin\sigma(\xi,\eta)\in C^{1,\frac{1}{2}}$. Using this and (8.1) one can prove that the function $\sin\omega(\xi,\eta)$ is uniformly $C^{1,\frac{1}{2}}$ continuous in the whole domain ABC.

Further, using the pseudo-Bernoulli's law we notice that $\rho(\xi,\eta)$ is uniformly $C^{1,\frac{1}{2}}$ continuous in the whole region ABC which means that the function $c(\xi,\eta)$ is uniformly $C^{1,\frac{1}{2}}$ continuous. The expressions for pseudo-velocities lead to uniform $C^{1,\frac{1}{2}}$ continuity of the functions $u(\xi,\eta)$ and $v(\xi,\eta)$ in the entire region ABC.

Also from (8.1) and (8.2) we notice that l_ξ^ϑ and l_η^ϑ are $C^{\frac{1}{2}}$ continuous and $(l_\xi^\vartheta)^2 + (l_\eta^\vartheta)^2$ is bounded. Therefore, the sonic boundary $\overline{AC}$ is $C^{1,\frac{1}{2}}$ continuous.

We summarize the regularity results in the following theorem.

Theorem 8.1. *If the angle $\beta_C \in (-\frac{\pi}{2}, 0)$, then the Goursat problem* (2.1) *and* (3.2) *admits a global smooth solution in the region ABC where the curve $\overline{AC}$ is the sonic boundary. Further, this solution is uniformly $C^{1,\frac{1}{2}}$ continuous up to the sonic boundary $\overline{AC}$ and the sonic boundary $\overline{AC}$ is $C^{1,\frac{1}{2}}$ continuous.*

9 Conclusions

In this paper, we considered a special case of convex pressure and proved that the global solution to the semi-hyperbolic patch problem for two-dimensional compressible Euler equations with van der Waals gas exists and these solutions are uniformly $C^{1,\frac{1}{2}}$ continuous and also the sonic boundary is $C^{1,\frac{1}{2}}$ continuous. The study of semi-hyperbolic patch problem opens door to extend the solution into the subsonic domain, which we will try to tackle in future.

References

[1] T. Zhang, Y. Zheng, Conjecture on structure of solutions of Riemann problem for 2-D gasdynamic system, SIAM Journal on Mathematical Analysis 21 (3) (1990) 593–630.

[2] J. Glimm, X. Ji, J. Li, X. Li, P. Zhang, T. Zhang, Y. Zheng, Transonic shock formation in a rarefaction Riemann problem for the 2D compressible Euler equations, SIAM Journal on Applied Mathematics 69 (3) (2008) 720–742.

[3] C. W. Schulz-Rinne, J. P. Collins, H. M. Glaz, Numerical solution of the Riemann problem for two-dimensional gas dynamics, SIAM Journal on Scientific Computing 14 (6) (1993) 1394–1414.

[4] A. Kurganov, E. Tadmor, Solution of two-dimensional Riemann problems for gas dynamics without Riemann problem solvers, Numerical Methods for Partial Differential Equations 18 (5) (2002) 584–608.

[5] Y. Zheng, Systems of conservation laws: two-dimensional Riemann problems, Vol. 38, Springer Science & Business Media, 2012.

[6] J. Li, T. Zhang, S. Yang, The two-dimensional Riemann problem in gas dynamics, Vol. 98, CRC Press, 1998.

[7] K. Song, Y. Zheng, Semi-hyperbolic patches of solutions of the pressure gradient system, Discrete & Continuous Dynamical Systems-A 24 (4) (2009) 1365–1380.

[8] M. Li, Y. Zheng, Semi-hyperbolic patches of solutions to the two-dimensional Euler equations, Archive for Rational Mechanics and Analysis 201 (3) (2011) 1069–1096.

[9] J. Chen, G. Lai, Semi-hyperbolic patches of solutions to the two-dimensional compressible magnetohydrodynamic equations, Communications on Pure & Applied Analysis 18 (2) (2019) 943–958.

[10] W. Sheng, G. Wang, T. Zhang, Critical transonic shock and supersonic bubble in oblique rarefaction wave reflection along a compressive corner, SIAM Journal on Applied Mathematics 70 (8) (2010) 3140–3155.

[11] R. Courant, K. O. Friedrichs, Supersonic flow and shock waves, Vol. 21, Springer Science & Business Media, 1999.

[12] A. M. Tesdall, R. Sanders, B. L. Keyfitz, Self-similar solutions for the triple point paradox in gasdynamics, SIAM Journal on Applied Mathematics 68 (5) (2008) 1360–1377.

[13] A. M. Tesdall, R. Sanders, B. L. Keyfitz, The triple point paradox for the nonlinear wave system, SIAM Journal on Applied Mathematics 67 (2) (2007) 321–336.

[14] Y. Hu, J. Li, W. Sheng, Degenerate Goursat-type boundary value problems arising from the study of two-dimensional isothermal Euler equations, Zeitschrift für angewandte Mathematik und Physik 63 (6) (2012) 1021–1046.

[15] Q. Wang, Y. Zheng, The regularity of semi-hyperbolic patches at sonic lines for the pressure gradient equation in gas dynamics, Indiana University Mathematics Journal 63 (2) (2014) 385–402.

[16] K. Song, Q. Wang, Y. Zheng, The regularity of semi-hyperbolic patches near sonic lines for the 2-D Euler system in gas dynamics, SIAM Journal on Mathematical Analysis 47 (3) (2015) 2200–2219.

[17] Y. Hu, T. Li, The regularity of a degenerate Goursat problem for the 2-D isothermal Euler equations, Communications on Pure & Applied Analysis 18 (6) (2019) 3317–3336.

[18] Y. Hu, T. Li, An improved regularity result of semi-hyperbolic patch problems for the 2-d isentropic Euler equations, Journal of Mathematical Analysis and Applications 467 (2) (2018) 1174–1193.

[19] J. Li, Y. Zheng, Interaction of four rarefaction waves in the bi-symmetric class of the two-dimensional Euler equations, Communications in Mathematical Physics 296 (2) (2010) 303–321.

[20] J. Li, Y. Zheng, Interaction of rarefaction waves of the two-dimensional self-similar Euler equations, Archive for rational mechanics and analysis 193 (3) (2009) 623–657.

[21] Y. Hu, J. Li, Sonic-supersonic solutions for the two-dimensional steady full Euler equations, Archive for Rational Mechanics and Analysis 235 (3) (2020) 1819–1871.

[22] G. Lai, W. Sheng, Centered wave bubbles with sonic boundary of pseudosteady Guderley Mach reflection configurations in gas dynamics, Journal de Mathématiques Pures et Appliquées 104 (1) (2015) 179–206.

[23] Y. Hu, G. Wang, Semi-hyperbolic patches of solutions to the two-dimensional nonlinear wave system for Chaplygin gases, Journal of Differential Equations 257 (5) (2014) 1567–1590.

[24] J. Li, T. Zhang, Y. Zheng, Simple waves and a characteristic decomposition of the two dimensional compressible Euler equations, Communications in Mathematical Physics 267 (1) (2006) 1–12.

[25] J. Li, Z. Yang, Y. Zheng, Characteristic decompositions and interactions of rarefaction waves of 2-D Euler equations, Journal of Differential Equations 250 (2) (2011) 782–798.

[26] T. Zhang, Y. Zheng, Sonic-supersonic solutions for the steady Euler equations, Indiana University Mathematics Journal 63 (6) (2014) 1785–1817.

[27] T. Zhang, Y. Zheng, Existence of classical sonic-supersonic solutions for the pseudo steady Euler equations, Scientia Sinica Mathematica 47 (10) (2017) 1367–1384.

[28] T. Zhang, Y. Zheng, The structure of solutions near a sonic line in gas dynamics via the pressure gradient equation, Journal of Mathematical Analysis and Applications 443 (1) (2016) 39–56.

[29] Y. Hu, J. Li, On a global supersonic-sonic patch characterized by 2-d steady full Euler equations, Advances in Differential Equations 25 (5/6) (2020) 213–254.

[30] F. Li, Y. Hu, On a degenerate mixed-type boundary value problem to the 2-d steady Euler equation, Journal of Differential Equations 267 (11) (2019) 6265–6289.

[31] Y. Hu, T. Li, Sonic-supersonic solutions for the two-dimensional pseudo-steady full Euler equations, Kinetic & Related Models 12 (6) (2019) 1197.

[32] H. Song, Y. Hu, On a regularity result for the transonic pressure-gradient system in gas dynamics, Journal of Mathematical Analysis and Applications 481 (2) (2020) 123495.

[33] G. Lai, On the expansion of a wedge of van der Waals gas into a vacuum II, Journal of Differential Equations 260 (4) (2016) 3538–3575.

[34] W. Sheng, S. You, Interaction of a centered simple wave and a planar rarefaction wave of the two-dimensional Euler equations for pseudo-steady compressible flow, Journal de Mathematiques Pures et Appliquees 114 (9) (2018) 29–50.

[35] Z. Dai, T. Zhang, Existence of a global smooth solution for a degenerate Goursat problem of gas dynamics, Archive for Rational Mechanics and Analysis 155 (4) (2000) 277–298.

[36] H. B. Callen, Thermodynamics and an Introduction to Thermostatistics, American Association of Physics Teachers, 1998.

[37] G. Lai, On the expansion of a wedge of van der Waals gas into a vacuum, Journal of Differential Equations 259 (3) (2015) 1181–1202.

[38] D. Li, W. Yu, Boundary value problems for quasilinear hyperbolic systems, Duke University, 1985.

[39] J. Smoller, Shock waves and reaction—diffusion equations, Vol. 258, Springer Science & Business Media, 2012.

[40] D. Li, Global classical solutions for quasilinear hyperbolic systems, Vol. 32, John Wiley & Sons, 1994.

[41] R. Arora, V. Sharma, Convergence of strong shock in a Van der Waals gas, SIAM Journal on Applied Mathematics 66 (5) (2006) 1825–1837.

[42] N. Gupta, V. Sharma, Diffraction of a weak shock by a wedge in a van der waals gas, IMA Journal of Applied Mathematics 81 (5) (2016) 824–841.