Mediating Ribosomal Competition by Splitting Pools

Jared Miller, M. Ali Al-Radhawi, and Eduardo D. Sontag

arXiv:2009.00539v3 [q-bio.MN] 4 Sep 2020

Abstract

Synthetic biology constructs often rely upon the introduction of "circuit" genes into host cells, in order to express novel proteins and thus endow the host with a desired behavior. The expression of these new genes "consumes" existing resources in the cell, such as ATP, RNA polymerase, amino acids, and ribosomes. Ribosomal competition among strands of mRNA may be described by a system of nonlinear ODEs called the Ribosomal Flow Model (RFM). The competition for resources between host and circuit genes can be ameliorated by splitting the ribosome pool by use of orthogonal ribosomes, where the circuit genes are exclusively translated by mutated ribosomes. In this work, the RFM system is extended to include orthogonal ribosome competition. This Orthogonal Ribosomal Flow Model (ORFM) is proven to be stable through the use of Robust Lyapunov Functions. The optimization problem of maximizing the weighted protein translation rate by adjusting allocation of ribosomal species is formulated and implemented.

I. Introduction

The process of protein expression is mediated by ribosomes. After a gene in DNA has been transcribed into messenger RNA (mRNA), a ribosome binds to the mRNA and begins protein translation. The mRNA is divided into a set of 3-nucleotide segments called codons, and each codon corresponds to an amino acid or a stop instruction. The ribosome attracts a tRNA carrying an amino acid which matches the currently read codon, and appends it to a growing polypeptide chain. Once the ribosome hits a stop codon, it falls off the mRNA and releases the amino acid chain as a polypeptide, which is subsequently post-translationally processed into a final protein product. The mRNAs remain in the cell until they are degraded or destroyed (such as by siRNA or RISC). Intact mRNAs continually attract ribosomes and produce protein, and all mRNAs in the cell compete for a finite pool of resources which includes ribosomes.

One way to decouple host and circuit genes is to split the pool of resources via orthogonal ribosomes [1], [2]. Orthogonal ribosomes are mutated ribosomes which only translate specifically modified circuit genes, and can be constructed by introducing a synthetic 16s rRNA into the cell. The circuit's mRNAs binding sites are designed so that only mutated ribosomes will translate circuit mRNAs; host ribosomes are not attracted to the circuit mRNAs [3]. Orthogonal ribosomes may be able to decrease competition and increase protein throughput by splitting the pool.

We present the Orthogonal Ribosomal Flow Model (ORFM) extending the existing RFM. The ORFM system is a conservative system where the total number of ribosomes is conserved. Global asymptotic stability of the ORFM is certified by means of robust Lyapunov functions. A simple bisection algorithm is detailed to compute the unique ORFM steady state. The protein throughput of the ORFM system can be changed by adjusting the production rate of different species of ribosomes, and maximizing this throughput is a non-concave optimization problem.

The structure of the paper is as follows: Section II reviews existing models for protein translation and ribosome competition. Section III introduces the ORFM. Section IV adds a feedback controller to regulate production of ribosomes. Section V presents a non-concave optimization problem to maximize protein throughput. Section VI concludes the paper. The stability of the ORFM is proved in the Appendix.

The authors are with the Department of Electrical & Computer Engineering, Northeastern University, Boston, MA. E.D. Sontag, is also with the Department of Bioengineering, Northeastern University, and the Laboratory of Systems Pharmacology, Harvard Medical School, Boston, MA. Emails: {miller.jare,malirdwi,e.sontag}@northeastern.edu.

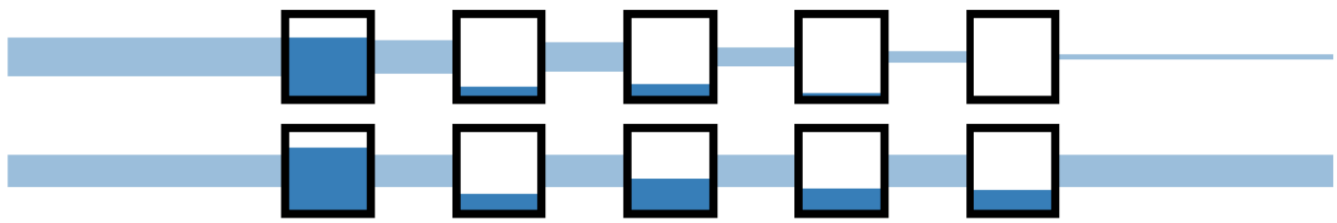

Fig. 1: A pictorial representation of the inflow, outflow, and densities of a 5-codon RFMIO at times $t = 1.5$ and ∞.

II. Ribosomal Flow Models (RFMs)

A. Single-Strand Translation Models

The first models analyzing steady-state ribosomal distributions on mRNA were based on lattice models. In a Totally Asymmetric Simple Exclusion Process (TASEP), mRNA is represented as a finite-length one-dimensional lattice of codons [4], [5]. Each ribosome waits a random amount of time (exponentially distributed) before attempting to move rightwards to the next codon.

The RFM is a deterministic mean-field approximation to the TASEP model [6]. Each codon on the mRNA has a normalized ribosomal density $x_j(t) \in [0, 1]$, which one may think of as the probability that a ribosome is present on codon j at time t. Transition rates between codons are denoted here as λ_j. The initiation rate λ_0 is the rate at which the mRNA attracts the ribosome to begin translation, while the $\lambda_{j<n}$ are elongation rates, and represent the amount of time required for the ribosome to attract the codon's respective tRNA. Finally, λ_n is the rate at which ribosomes separate from the mRNA and release the completed polypeptide chain. The quantity $y = \lambda_n x_n$ is the rate (protein/time) at which protein is produced by the mRNA. An RFMIO (input/output) is a tridiagonal polynomial single-input single-output system:

$$\begin{aligned} \dot{x}_1 &= \lambda_0 u(1 - x_1) - \lambda_1 x_1(1 - x_2) \\ \dot{x}_j &= \lambda_{j-1} x_{j-1}(1 - x_j) - \lambda_j x_j(1 - x_{j+1}), 1 < j < n \\ \dot{x}_n &= \lambda_{n-1} x_{n-1}(1 - x_n) - \lambda_n x_n \\ y &= \lambda_n x_n \end{aligned} \tag{1}$$

The output y is the described translation rate, and the input u is the rate at which new ribosomes become available. Ribosomal flux for each codon x_j is based on inflow minus outflow, where the individual flows are determined by parabolic current-density relations multiplied by the elongation rate. Ribosomes are more likely to flow from codon x_j to x_{j+1} if x_j is full and x_{j+1} is empty, inspiring the term $(1-x_j)x_{j+1}$. The state coordinates x_j are occupancy fractions, thus restricted to take values in $[0, 1]$

For a constant input $u > 0$, there is a unique steady-state in $[0, 1]^n$ for system (1), which we denote as e. Figure 1 shows the steady state of an 5-codon RFM. Each codon is a black box, and x_j is the filled proportion of each codon. Ribosomes flow from left to right, and the bars between codons show the flux rates $\lambda_j x_j(1 - x_{j+1})$ (which must be all equal, as is clear from the equations). The steady state output $y = \lambda_n e_n$ may be computed by solving a finite continued fraction, which results in a polynomial equation of degree $(n + 1)/2$ [6]. A spectral formulation for the constant u was presented by Poker *et. al.*, and is reviewed in Algorithm 1. The operator **tridiag**(α, β) for $\alpha \in \mathbb{R}^n, \beta \in \mathbb{R}^{n-1}$ produces a symmetric tridiagonal matrix with main diagonal α and 1-off-diagonals β. For a square matrix M, $\sigma_{max}(M)$ and $v_{max}(M)$ are the dominant eigenvalue and eigenvectors. By the Perron-Frobenius theorem, ζ_1 has nonnegative entries.

Algorithm 1: RFMIO Steady State (from [7])

input : Rates λ, Constant Input u
output: Codon Steady States e_j
$\mu_j = 1/\sqrt{\lambda_j}$ for $j = 0 \dots n$
$J = \textbf{tridiag}(\mathbf{0}_{n+2}, \mu)$
$\sigma = \sigma_{max}(J),\ \zeta = v_{max}(J)$
$e_j = \frac{\mu_j}{\sigma}\frac{\zeta_{j+2}}{\zeta_{j+1}}$ for $j = 1 \dots n$

The RFM system is a monotone control system, and the set of admissible controls $u \in \mathcal{U}$ is the set of bounded and measurable functions $u \in \mathbb{R}_+$. The RFM is also state and output-controllable, and desired translation rates and patterns can be achieved by proper choice of u and λ [8].

B. Ribosomal Competition

In real genetic systems, protein translation on a strand of mRNA does not occur in isolation. At any particular moment, all mRNA's in the cell compete for a finite (and possibly time-varying) number of ribosomes. Particularly slow transition rates λ on codons can lead to strands of mRNA hoarding ribosomes, reducing the availability of ribosomes in the pool for all other mRNA's and leading to a globally depressed translation rate.

Competition was introduced into the RFM framework in the case of one strand of mRNA by positive feedback [9] and on circular mRNA [10], in each case resulting in systems with a globally asymptotically stable steady state. Raveh *et. al.* introduced a ribosomal flow model network with a pool (RFMNP) to abstractly describe the impact of ribosomal competition [11]. Each of the s strands of mRNA is modeled by a RFMIO (x^i_j for codon j of mRNA i), and all RFMIO are connected to a common pool z. The total number of ribosomes in the system $N_r = z(t) + \sum_{i,j} x^i_j(t)$ is a conserved quantity. The input u of each mRNA is a monotonically increasing concave saturation function $G^i(z)$ (commonly z or $\tanh(z)$), which describes the likelihood that a ribosome from the pool will attach itself to strand i. The output $y^i = \lambda^i_n x^i_n$ is the translation rate, and ribosomes leaving x_i return to the pool. The pool dynamics are therefore:

$$\dot{z} = \sum_i \lambda^i_n x^i_n - \sum_i \lambda^i_0 G(z)(1 - x^i_1) \tag{2}$$

The RFMNP is a closed loop system. The number of ribosomes N_r defines a stoichiometric class, and RFMNP has a globally asymptotic equilbrium point with all $e^i_j \in (0, 1)$ and $z \in (0, N_r)$ for each N_r. Stability can be proven by contraction, where the weighted L_1 norm between trajectories is non-expanding over time [11].

Competition effects can be observed by perturbing parameters λ^i_j and analyzing resultant steady states. If λ^i_j changes for a specific strand of mRNA x^i, then the protein translation rate y^i will change in that same direction (increasing λ^i_j will increase y_j). The translation rate of all other mRNA in the network will change uniformly: an increase in λ^i_j will raise y^i and will either raise or lower all $y^{k \neq i}$. Further discussion on competition effects can be found in Section 4.2 of [11], and some of these results are demonstrated in Figure 2. Figure 2 shows four examples of an RFMNP where each of the three strands of mRNA have five codons each. All strands start with homogeneous transition rates of $\lambda^i_j = 5$, and there are a total of $N_r = 5$ ribosomes in the system. Figure 2a visualizes the steady state of this homogenous system, where each mRNA has a protein translation rate of $y^{1:3}_{ss} = 1.15$. Ribosomes cannot easily pass from codons 4 to 5 because $\lambda^1_3 = 0.05$. This bottleneck drops the translation efficiency of strand 1 to $y^1_{ss} = 0.049$ and the others to $y^{2:3}_{ss} = 0.79$. Figure 2c has $\lambda^1_0 = 40$, so strand 1 attracts ribosomes from the pool at a much faster rate than the other strands. The first codon cannot drain ribosomes quickly

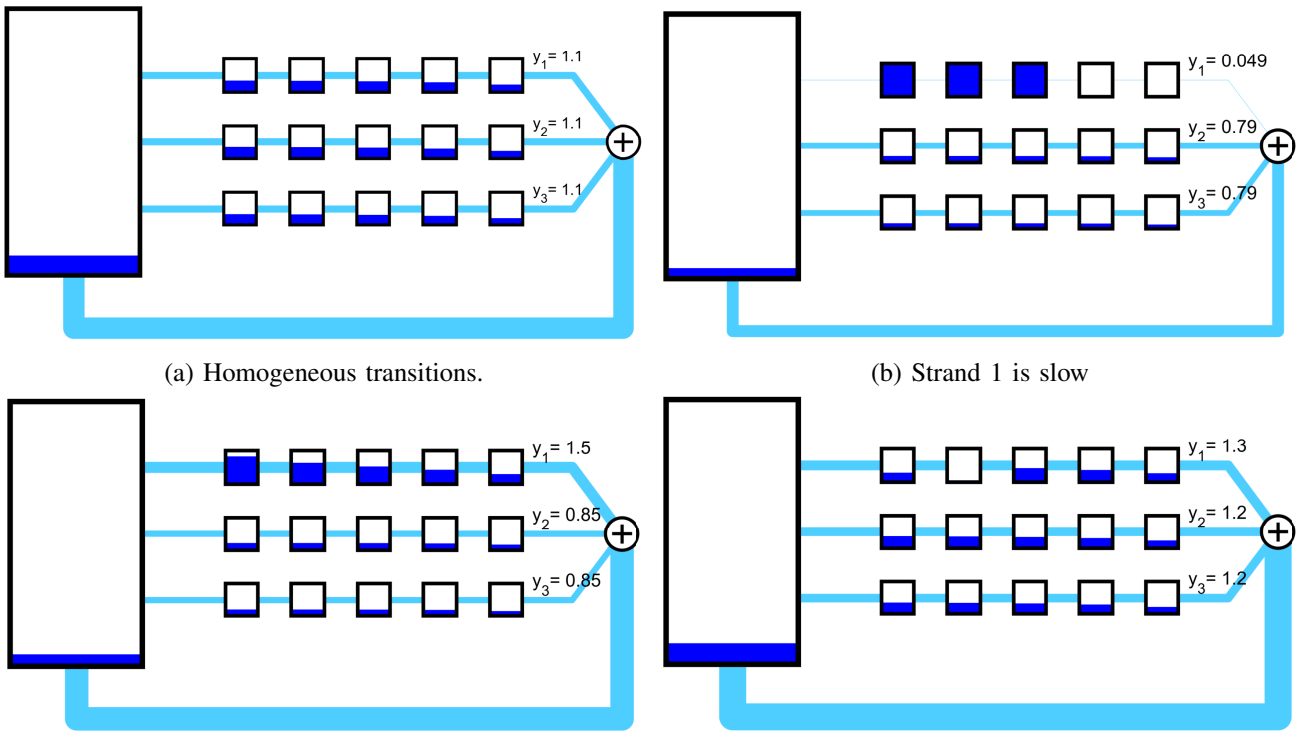

(a) Homogeneous transitions.

(b) Strand 1 is slow

(c) Strand 1 is greedy

(d) Strand 1 is fast

Fig. 2: RFM competition at steady state

since $\lambda^1_{1\ldots5} = 5$, so ribosomes are stuck in strand 1. Translation rates rise for strand 1 to $y^1_{ss} = 1.50$, and fall on other strands to $y^{2:3}_{ss} = 0.85$. Figure 2d modifies strand 1 to $\lambda^1_2 = 40$. Ribosomes quickly exit strand 1 and enter the pool again for use in further translation. This improves the translation efficiency of all strands, raising $y^1_{ss} = 1.33$ and $y^{2:3}_{ss} = 1.18$.

III. Orthogonal Ribosomal Flow Model

Orthogonal ribosomes can be added to the RFM scheme (ORFM) by splitting the ribosome pool z. Code for simulation and visualization is publicly available online at `https://gitlab.com/jarmill/Ribosomes`.

A. ORFM Formulation

The proposed model of ribosome translation has M species of ribosomes. Each ribosome species has a pool z_p for $p = 1 \ldots M$ of available ribosomes. Strands of mRNA that use ribosome type p form an RFNMP with pool z_p.

Ribosomes of type p are formed by the combination of a os-15 rRNA of type p and the remaining ribosome components. The protein backbone and large ribosomal subunit are treated as an 'Empty' ribosome E, which has no translation capacity on its own. Empty ribosomes bind with rRNA at rate k^+_p, and the ribosomal complex dissociates at rate k^-_p, assuming an effectively infinite amount of rRNA available. These kinetics are inspired by the work of Darlington *et. al.* in their mass-action model of protein translation and cell metabolism [12]. The M pools of translating ribosomes z_p are each connected to the pool of empty ribosomes z_E.

Each of the s_p strands of mRNA that obtain ribosomes from pool z_p will have a corresponding length n^{pi} and are repeated with multiplicity m^{pi}. The codon at location $j \in 0 \ldots n^{pi} - 1$ of RNA strand

$i \in 1 \dots s_p$ coming from pool p is x_j^{pi}. The constants of this system are the N_r ribosomes, binding rates k_p^+ and k_p^-, and transition rates λ_j^{pi}. The total number of ribosomes N_r is a conserved quantity:

$$N_r = z_E + \sum_{p=1}^{M} z_p + \sum_{p=1}^{M} \sum_{i=1}^{s_p} \left(m^{pi} \sum_{j=1}^{n^{pi}} x_j^{pi} \right) \tag{3}$$

The translation dynamics are:

$$\dot{z}_E = \sum_p k_p^- z_p - \sum_p k_p^+ z_E \tag{4a}$$

$$\dot{z}_p = k_p^+ z_E - k_p^- z_p + \sum_i m^{pi} \lambda_{n^{pi}}^{pi} x_{n^{pi}}^{pi} - \sum_i m^{pi} \lambda_0^{pi} (1 - x_1^{pi}) G^{pi}(z_p) \tag{4b}$$

$$\dot{x}_1^{pi} = \lambda_0^{pi} (1 - x_1^{pi}) G^{pi}(z_p) - \lambda_1^{pi} (1 - x_2^{pi}) x_1^{pi} \tag{4c}$$

$$\dot{x}_j^{pi} = \lambda_{j-1}^{pi} (1 - x_j^{pi}) x_{j-1}^{pi} - \lambda_j^{pi} (1 - x_{j+1}^{pi}) x_j^{pi} \tag{4d}$$

$$\dot{x}_{n^{pi}}^{pi} = \lambda_{n^{pi}-1}^{pi} (1 - x_{n^{pi}-1}^{pi}) x_{n^{pi}}^{pi} - \lambda_{n^{pi}}^{pi} x_{n^{pi}}^{pi} \tag{4e}$$

Define $\bar{N}_r = z_E + \sum_p z_p$. For a fixed $\bar{N}_r$, the number of ribosomes in each pool can be obtained by solving a linear system where $K_p = k_p^+ / k_p^-$:

$$z_p = K_p z_E \qquad \bar{N}_r = z_E + \sum_p z_p \tag{5}$$

Algorithm 2 computes the steady-state of the general model by bisection on $\bar{N}$. This algorithm can

Algorithm 2: ORFM Steady State

input : $\lambda_j^{pi},\ N_r,\ G^{pi},\ K_p,\ \epsilon$
output: Steady States z_E, z_p, e_j^{pi}
$\bar{N}_{min} = 0,\ \bar{N}_{max} = N_r$
repeat
  $\bar{N}_{curr} = (\bar{N}_{max} + \bar{N}_{min})/2$
  $z_E = \frac{\bar{N}_r}{1+\sum_p K_p} \qquad z_p = \frac{K_p \bar{N}_r}{1+\sum_p K_p}$
  $e^{pi} =$ RFMIO SS$(\lambda^{pi}, G^{pi}(z_p))$ (Alg. 1)
  $N_{curr} = \bar{N}_{curr} + \sum_{p,i,j} e_j^{pi}$
  if $N_{curr} \leq N_r$ **then**
    $z_{min} \leftarrow z_{curr}$
  else
    $z_{max} \leftarrow z_{curr}$
  end
until $|N_{curr} - N_r| \leq \epsilon$;

compute the steady state of an RFMNP by treating the network as a 1-species model with $K_1 \to \inf$ where $\bar{N} = z$.

Figure 3 shows examples of mRNA competing for $N_r = 10$ ribosomes, where each mRNA may take ribosomes from either the host pool ($p = 1$, blue) or the circuit pool ($p = 2$, red). The 'empty' ribosomes are displayed in purple in the third tank. In this network, $k_p^+ = k_p^- = 1$, so at steady state, the pool quantities $z_1 = z_2 = z_E$. In figure 3a no mRNA takes ribosomes from the circuit pool z_2, so the ribosomes in z_2 induce deadweight loss for the system.

Figure 4 illustrates a general model orthogonal ribosomal system with pool across three ribosomal subspecies and N_r = 20. Now k_p^+=k_p^-= $0.1, p = 1, 2, 3$, so all pools will have an equal number of ribosomes at equilibrium (z=0.286).

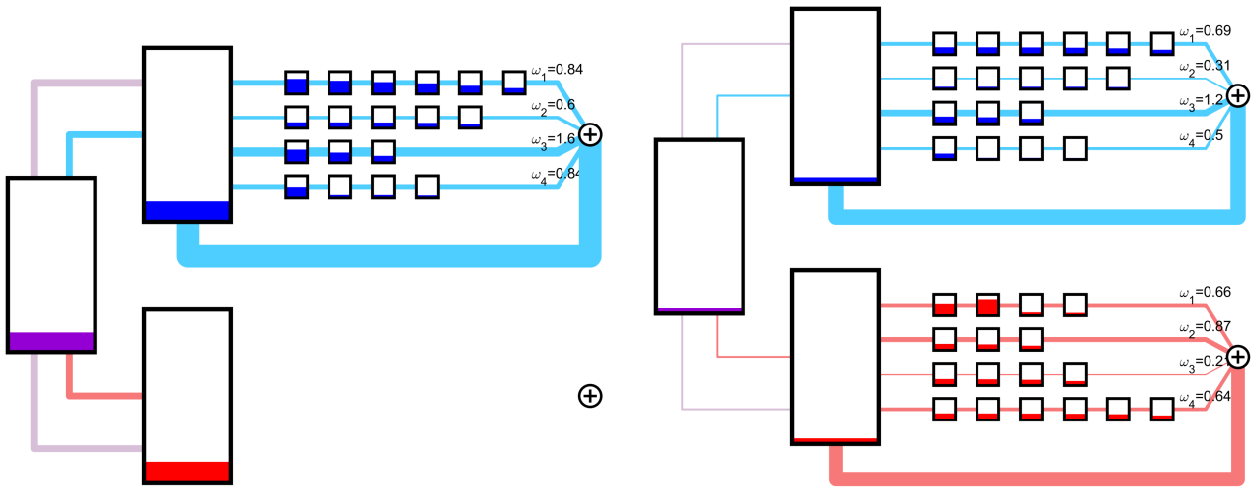

(a) No circuit demand (b) High circuit demand

Fig. 3: Orthogonal RFM visualizations

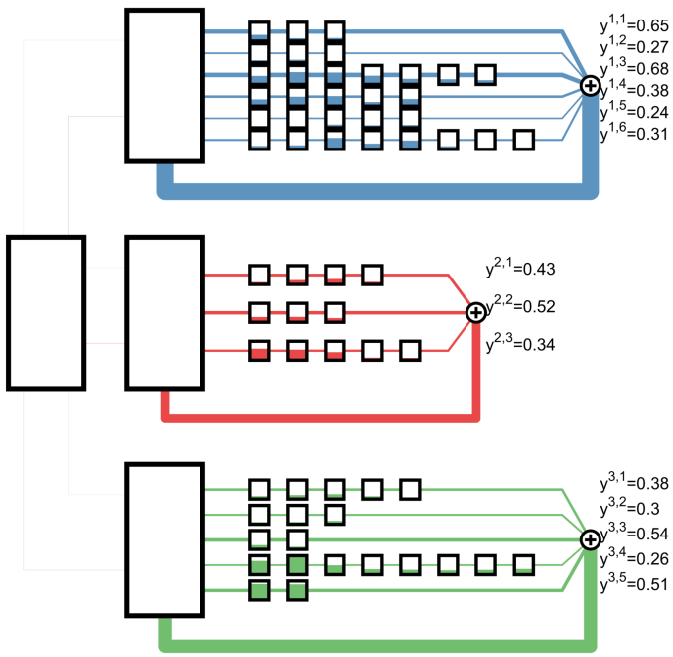

Fig. 4: ORFM with 3 ribosomal subspecies

B. Stability of the ORFM

The RFM has recently been studied by constructing explicit Robust Lyapunov Functions (RLFs) [13] via writing it as a Chemical Reaction Network (CRN) and utilizing relevant methods [14], [15], [16]. Such techniques provide explicit formulae of Lyapunov functions for general kinetics (not limited to Mass-Action kinetics), and have an easy-to-use software package.

In this subsection, we derive the stability of the ORFM model (4a)-(4e) via an RLF. Let $x =: [x_1^{1,1}, .., x_{n^{M,s_M}}^{M,s_M}] \in [0,1]^{N_c}$ be the vector of all codon occupancies, and N_c be the total number of codons. Let $z := [z_1, .., z_M, z_E]^T \in [0, N_r]^{M+1}$ be the vector of all pool occupancies. We therefore have:

Theorem 1: Consider the system (4a)-(4e). Then,

(1) The function:

$$V(x,z) = \sum_{p,i} m^{pi} \sum_j |\dot{x}_j^{pi}| + \sum_p |\dot{z}_p| + |\dot{z}_E|,$$

is a (non-strict) Lyapunov function for any choice of $\{\lambda_j^{p,i}\} > 0$ and monotone functions G^{pi}, and

(2) For any fixed total number of ribosomes in the system $N_r > 0$, there exists a unique positive globally asymptotically stable steady-state (x_e, z_e) for (4a)-(4e).

A proof can be achieved by transforming (4a)-(4e) into a CRN and extracting a stoichiometry matrix. For a fixed number of pools, strands, and codons, Theorem 1 can be verified via the software package `LEARN` [13]. A proof for the general result is given in the Appendix.

C. Cross-talk Model

The analysis of the previous sections assume that only host ribosomes translate host genes and only circuit ribosomes translate circuit genes. While it is energetically unfavorable for host ribosomes to translate circuit genes, this event may still happen at a low proability. The phenomenon of a ribosome of species p translating an mRNA that prefers ribosomes of species $p' \neq p$ is a 'cross-talk'. Each codon of mRNA still can only accomodate one ribosome at a time, so ribosomes of different species are additionally competing for space. x_j^p is the probability that a ribosome of species p sits at codon j, and $x_j = \sum_p x_j^p$ is the probability that some ribosome is present at codon j. A cross-talk RFM can be treated as a MISO polynomial (non-tridiagonal) system, with inputs u^p and output $y = \sum_{p'=1}^M \lambda_n^p x_n^p$:

$$\begin{aligned}
\dot{x}_0^p &= \lambda_0^p u^p (1 - \sum_{p'=1}^M x_0^{p'i}) - \lambda_1^p (1 - \sum_{p'=1}^M x_0^p) x_1^p \\
\dot{x}_j^p &= \lambda_{j-1}^p (1 - \sum_{p'=1}^M x_{j-1}^{p'i}) x_j^p - \lambda_j^p (1 - \sum_{p'=1}^M x_j^p) x_{j+1}^p \\
\dot{x}_{n^p}^p &= \lambda_{n^p-1}^p (1 - \sum_{p'=1}^M x_{n-1}^p) x_{n^p}^p - \lambda_n^p x_n^p
\end{aligned} \tag{6}$$

Fig. 5: mRNA with 3 ribosomal species

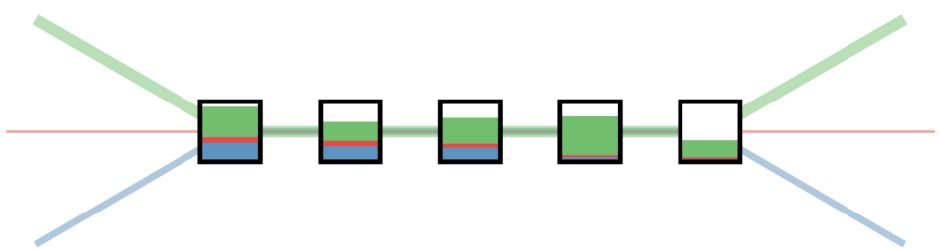

There is no requirement that the different transition rates λ_j^{pi} be the same between species. Figure 5 shows a 5-codon mRNA with λ_j^p uniformly drawn from the range $[0.5, 2.5]$.

A cross-talk RFM where of length n where $\lambda_j^p = \lambda^j, j \neq 0$ is equivalent to a standard RFM in terms of sums $s_j = \sum_{p=1}^M x_j^p$, with effective initial rate $\lambda_0^s = \sum_{p=1}^M \lambda_0^{pi}$. Ribosome flux in codons can be equivalently expressed as:

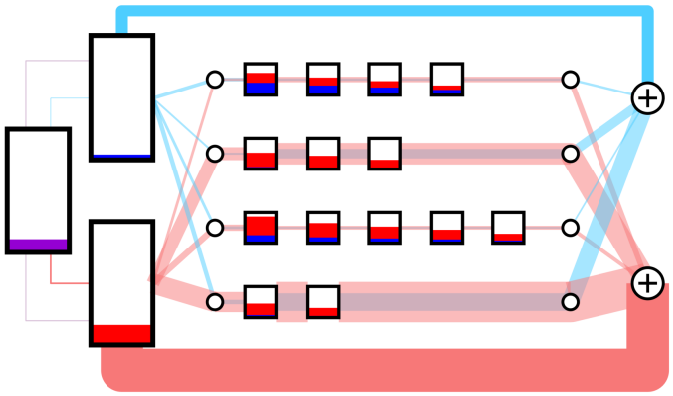

Fig. 6: A network of cross-talk mRNA

$$\dot{x}_j^p = \lambda_{j-1}(1-s_j)x_{j-1}^p - \lambda_j(1-s_{j+1})x_j^p \tag{7}$$

Equilibrium values for s can be found through spectral methods, and the steady state per-species codon values are:

$$x_{j<n}^p = \frac{\lambda_0^p}{\lambda_j}\frac{1-s_1}{1-s_{j+1}} \qquad x_n^p = \frac{\lambda_0^p}{\lambda_n}(1-s_1) \tag{8}$$

Stability and a simple method for computing steady-state solutions to the inhomogenous cross-talk RFM are still open questions. In all experiments, the cross-talk RFM is globally asymptotically stable in $x_j^p \in [0,1]$.

D. Cross-talk Competition

In an open loop crosstalk model, the various z_p are constant or are external inputs to the system. The crosstalk model can also have network competition, in which the empty-tank pool dynamics are added. As before, x_j^{pi} is the probability that a ribosome of species p is located on codon j of mRNA i at any particular time. The input u^{pi} applied to each strand is $G^{pi}(z_p)$, and pool dynamics $\dot{z}_p$ are adjusted to deal with the cross-talk effects (1-sum occupancy).

Figure 6 illustrates a cross-talk orthogonal RFM with $N_r = 10$ ribosomes.

IV. Self-Inhibiting Feedback Controller

This section introduces a feedback controller inspired by [12] to dynamically generate orthogonal ribosomes as needed in an ORFM. Figure 3a shows an example where there are no mRNAs that take ribosomes from the circuit pool z_2. A high k_2^+ therefore leads to the creation and maintenance of circuit ribosomes that are not used in translation. A feedback controller can be introduced to create orthogonal ribosomes only as needed, and decrease wastage in the system. This can be accomplished by creating one distinguished mRNA x^{pF} that translates a protein F_p for each non-Host pool. The dynamics of the protein F_p with a degradation rate δ_p is:

$$\dot{F}_p = \lambda_n^{pF} x_n^{pF} - \delta^p F_p \tag{9}$$

A Hill-like inhibition term can be used to suppress the creation of new ribosomes (based on Equation 18 of Supplement 1 of [12]). For a nominal ribosome creation rate k_p^{+0}, exponent γ_p, and constant F_p^0, the suppressed k_p^+ is: $k_p^+ = k_p^{+0}/(1+F_p/F_p^0)^{\gamma_p}$. If $\delta = 0$, F_p never degrades once translated. Asymptotically,

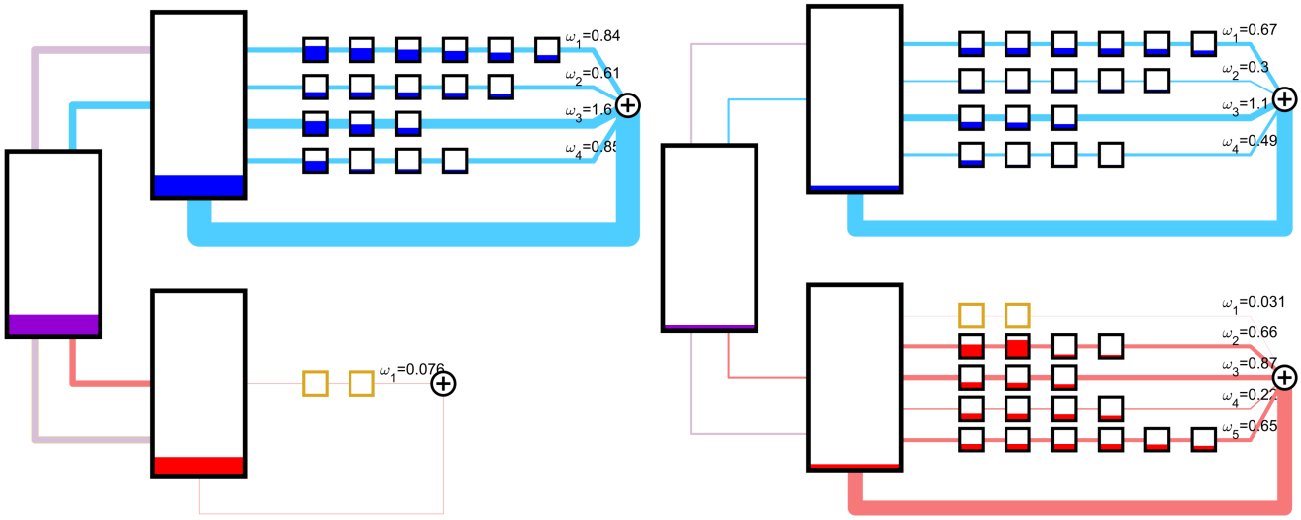

(a) No circuit demand

(b) High circuit demand

Fig. 7: ORFM with inhibitor protein F_p.

$k_p^+ \to 0$ and $z_p \to 0$. A choice of $\delta > 0$ will lead to $z_p > 0$, but proper choice in inhibitor parameters can allow for the nonzero z_p to be small if there is no mRNA demand.

Figure 7 shows an example of an ORFM with 10 ribosomes, where the circuit pool z_c has a feedback controller. The golden two-codon mRNA is the distinguished x^F that produces the inhibitor protein F with $\lambda^F = [0.1, 5, 5]$. The comparatively low initiation rate λ_0^F allows other mRNA if present to take ribosomes from z_C first. The inhibitor parameters are $F_p^0 = 4, \gamma_p = 2$, and $\delta^p = 0.2$. Simulations are run for $t = 0 \ldots 300$.

With no inhibitor and no circuit mRNA, the system in Figure 3a has a total of $N_r^H = 7.63$ ribosomes in the host pool and mRNA. With the inhibitor in Figure 7a, the total number of host ribosomes rises to $N_r^H = 7.73$. Figure 3b has a high circuit demand, and $N_r^H = 3.94$. With an inhibitor in Figure 7b, $N_r^H = 4.05$. At no demand, the steady state $F_p = 0.38$, and at high demand, $F_p = 0.16$.

V. Optimization

The goal of optimization in this section is to maximize the rate of protein production by mRNA. Optimization of protein throughput in a single strand has previously been treated by Poker *et. al.* in [7]. Given an n-codon mRNA with allowable choices of λ_j in a convex set, finding a λ^* that maximizes the throughput $y = \lambda_n e_n$ is a concave optimization problem.

Ribosomes with a pool have an additional layer of feedback. For a single strand with λ_j taking ribosomes from pool z, the effective intake rate as in Equation (1) is $\lambda_0 G(z)$. Since $G(z)$ is monotonically increasing and concave, the throughput y is also a concave function of z.

This concavity breaks when multiple strands of mRNA are connected to the same pool, as shown in Figure 8 for an RFMNP with 6 strands (Section II-B). The left plot shows the protein production y^i rate of each strand for $N_r \in [0, 18]$. All curves are monotonically increasing with inflection points. This nonconcavity comes from competition effects: an exceptionally greedy strand of mRNA will take ribosomes until it is saturated, and then other strands of mRNA can translate. In contrast, the right hand plot illustrates the translation rate as a concave function of tank capacity. The mapping $N_r \to z$ carries the competition effects and nonconcavity. It is conjectured that the mapping $N_r \to y$ is concave if there is only a single strand connected to the pool.

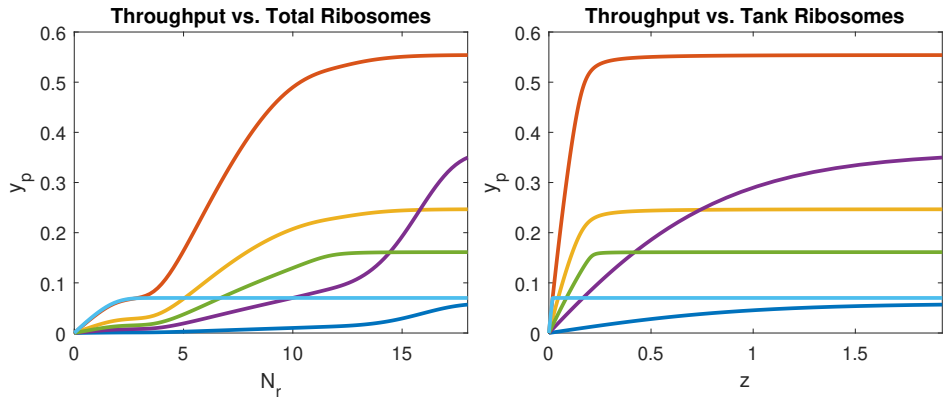

Fig. 8: Protein throughput per mRNA

The objective in this section is to maximize the weighted sum of protein production $y_w = \sum_{p,i} w^{pi} y^{pi}$. Appropriate selection of the weights w can specify particular proteins as desirable or repellent. As a problem setting, consider a multi-species RFM network with M species and N ribosomes. There will be $M+1$ pools: z_E for the empty ribosomes and z_p for the translating species. Assume that $p = 1$ represents the host ribosome with host genes, and that each circuit gene may only accept ribosomes from a single pool z_p. The matching of pools and circuit genes that maximizes y_w requires solving a binary assignment problem. If a new synthetic gene was to be designed in an environment where there is severe competition for circuit ribosomes, it may be favorable for this new gene to employ host ribosomes. This can be generalized to multi-species orthogonal ribosomal networks. An alternative problem can be formulated in terms of equilbrium constants K_p. If there exists sufficient flexibility to adjust $k_p^+ \in [k_p^{+,min}, k_p^{+,max}] > 0$ and $k_p^- \in [k_p^{-,min}, k_p^{-,max}] > 0$, then:

$$K_p \in [K_p^{min}, K_p^{max}] = \left[\frac{k_p^{+,min}}{k_p^{-,max}}, \frac{k_p^{+,max}}{k_p^{-,min}}\right] > 0.$$

For each point $K = \{K_p\}_{p=1}^M$, the weighted protein output $y_w(K)$ can be obtained by finding the steady state with respect to K using Algorithm 2 and then evaluating $y_w = \sum w^{pi} y^{pi}$. An optimization problem to maximize y_w at steady state can therefore be formulated:

$$y_w^* = \max_{K_p} \sum_{p,i} w^{pi} y^{pi}, \tag{10}$$

$$\textit{subject to}: K_p \in [K_p^{min}, K_p^{max}]. \text{(Dynamics in (4a)-(4e).)}$$

The search variables are K, and the steady states (z_E, z_p, e_j^{pi}) are derived quantities of K. Generic solvers such as a Grid Search, Bayesian Optimization, and Basin Hopping can be used to approximate K^*. It can be verified that $\partial e_j^{pi}/\partial K_p > 0$ and $\partial e_j^{p'i}/\partial K_p < 0$ for $p' \neq p$ by evaluating derivatives of steady states. Raising K_p increases z_p, e_j^{pi}, y^{pi} at the expense of z_E and $z_{p'}$, $e_j^{p'i}$, $y^{p'i}$ for $p' \neq p$.

Fig 9 shows an ORFM with $s_1 = 6$ and $s_2 = 3$ with an objective of maximizing total protein output($w = \mathbf{1}$). If all mRNA were connected to a common pool of ribosomes (RFMNP), the resultant output is $y_w = 3.18$. When $K = [5, 5]$, then $y_2 = 3.11$ as shown in Figure 9a. Solving the optimization problem in Equation (10) with $K^{min} = 1/5$ and $K^{max} = 5$ results in $K^* = [5, 0.734]$ and the protein output is $y_w = 3.38$ in Figure 9b. At steady state in the optimal allocation, z^H will contain 74% of all ribosomes in the pools $(\bar{N}_r)$. The optimization landscape of y_w vs. $(\log_{10}(K_1), \log_{10}(K_2))$ is displayed in Figure 10.

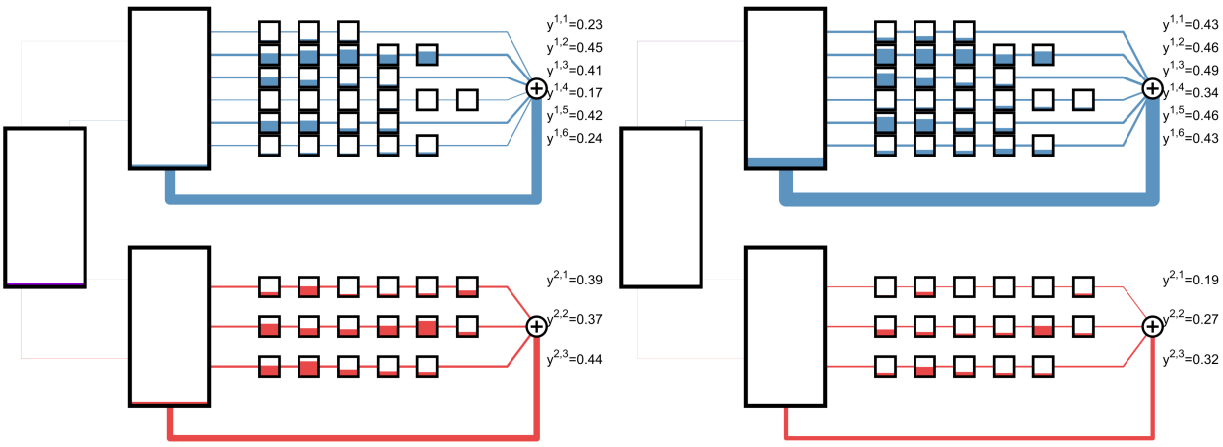

(a) Parity: $y_W = 3.11$ (b) Optimal: $y_W = 3.39$

Fig. 9: Optimize the total protein output $(w = \mathbf{1})$

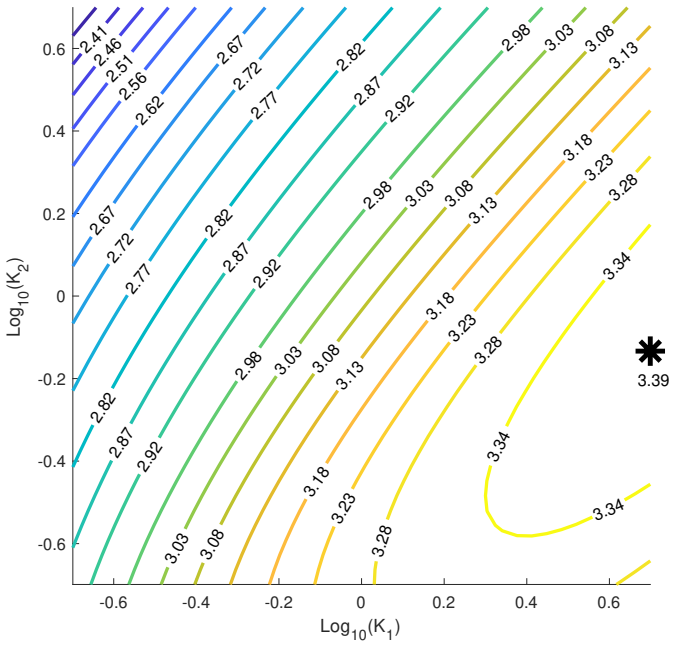

Fig. 10: Contours of total protein output

VI. Conclusion

Competition for finite resources are inevitable in protein translation. Orthogonal ribosomes have been developed to boost protein throughput by decoupling circuit genes from the host pool of ribosomes. We extended the existing RFM to orthogonal ribosomes, and generalized the system to an arbitrary number of ribosomal species. Stability results through RLFs and a simple algorithm to compute steady states were shown for the ORFM system. A self inhibiting feedback controller can adjust ribosomal production as needed. Maximizing the weighted sum of protein throughput can be formulated as a low-variable nonconvex optimization problem. Future work includes matching results with lab experiments and allowing for cross-talk in translation.

APPENDIX: PROOF OF THEOREM 1

For simplicity, assume that $s_p = s, n^{p,i} = n$, for all p, i. Also, assume $m^{p,i} = 1$, for all p, i. The argument for the general case will be the similar. Denote $\sigma(x) := \text{sgn}(x)$.

To use the techniques in [16], [13], we lift (4a)-(4e) to a higher-dimensional space by defining the *vacancy* $w_j^{p,i} := 1 - x_j^{pi}$, for all j, i, p. Hence, terms of the form $(1 - x_{j-1}^{pi})x_j^{pi}$ take the familiar Mass-Action form: $w_{j-1}^{pi} x_j^{pi}$. We will generalize this further by considering arbitrary *monotone* functions of the form $R(w_{j-1}^{pi}, x_j^{pi})$. Hence, we write (4a)-(4e) as:

$$\begin{aligned}
\dot{z}_E &= \textstyle\sum_p R_p^-(z_p) - \sum_p R_p^+(z_E) \\
\dot{z}_p &= R_p^+(z_E) - R_p^-(z_p) + \textstyle\sum_i \left(R_n^{pi}(x_n^{pi}) - R_0^{pi}(w_1^{pi}, z_p)\right) \\
\dot{x}_1^{pi} &= R_0^{pi}(w_1^{pi}, z_p) - R_1^{pi}(w_2^{pi}, x_1^{pi}) \\
\dot{x}_j^{pi} &= R_{j-1}^{pi}(w_j^{pi}, x_{j-1}^{pi}) - R_j^{pi}(w_{j+1}^{pi}, x_j^{pi}) \\
\dot{x}_n^{pi} &= R_{n-1}^{pi}(w_n^{pi}, x_{n-1}^{pi}) - R_n^{pi}(x_n^{pi}).
\end{aligned} \tag{11}$$

We only assume that the rates $R_j^{p,i}, R_p^{\pm}$ are monotone w.r.t their reactants, see [13] for the full assumptions.

Consider $V(x, z) = \sum_{i,p,j} |\dot{x}_j^{pi}| + \sum_p |\dot{z}_p| + |\dot{z}_E|$. We show that V is non-increasing. Using (11), note that the space can be partitioned into regions, and V is *linear* in *rates* on each region. Fix an *open* region $\mathcal{W}$ and write $V = \sum_{p,i,j} \alpha_j^{pi} R_j^{pi}(x, z) + \sum_p \beta_p (R_p^-(z_p) - R_p^+(z_E))$ on $\mathcal{W}$. Note V is differentiable on $\mathcal{W}$, and the signs of the currents $\dot{x}_j^{pi}, \dot{z}_p, \dot{z}_E$ are constant on $\mathcal{W}$. We claim that the derivative of each term in V is non-positive. We show first that $\alpha_j^{pi} \dot{R}_j^{pi} \leq 0$ for all p, i, j. We study three cases: $j = 0, n$, $0 < j < n$. If $j \neq 0, n$, then R_j^{pi} appears in $\dot{x}_j^{pi}, \dot{x}_{j+1}^{pi}$. If both have the same sign on $\mathcal{W}$, then (11) implies $\alpha_j^{pi} = 0$. Therefore, $\alpha_j^{pi} \neq 0$ implies $\sigma(\alpha_j^{pi}) = -\sigma(\dot{x}_j^{pi}) = \sigma(\dot{x}_{j+1}^{pi}) = -\sigma(\dot{w}_{j+1}^{pi})$. Hence, $\alpha_j^{pi} \dot{R}_j^{pi} = \alpha_j^{pi} (\frac{\partial R_j^{pi}}{\partial x_j^{pi}} \dot{x}_j^{pi} + \frac{\partial R_j^{pi}}{\partial w_{j+1}^{pi}} \dot{w}_{j+1}^{pi}) \leq 0$ as claimed, where non-negativity of the partial derivatives follows from monotonicity. Next, consider the case $j = 0$ where R_0^{pi} appears in two currents $\dot{x}_1^{pi}, \dot{z}_p$. Similar to the previous case, we conclude that if $\alpha_0^{pi} \neq 0$ then $\sigma(\alpha_0^{pi}) = -\sigma(z_p) = -\sigma(\dot{w}_1^{pi})$. Since R_0^{pi} is a monotone function of w_1^{pi}, z_1^{pi}, then $\alpha_0^{pi} \dot{R}_0^{pi} \leq 0$ as claimed. Finally, if $j = n$, similar analysis can be repeated to conclude that if $\alpha_n^{pi} \neq 0$ then $\sigma(\alpha_n) = -\sigma(x_n^{pi})$ and $\alpha_n \dot{R}_n^{pi} \leq 0$ as claimed. Next, we want to show that $\beta_p \dot{R}_p^- \leq 0$. Fix p. Note that R_p^- appears in two currents: $\dot{z}_p, \dot{z}_E$. If they have the same sign then $\beta_p = 0$. If they have different signs then (11) implies that $\sigma(\beta_p) = -\sigma(\dot{z}_p) = \sigma(\dot{z}_E)$. Since R_p^- is a function of z_p, then $\beta_p \dot{R}_p^- \leq 0$. A similar argument can be replicated to show that $-\beta_p \dot{R}_p^+ \leq 0$. Since $\mathcal{W}$ and p, i, j were arbitrary, we conclude that $\dot{V} \leq 0$ over the interior of all regions. The boundaries between the regions can be dealt with via the definition of the upper Dini's derivative, see [16]. This concludes the proof of the first statement of Theorem 1.

We proceed to prove part 2. The RLF utilized is non-strict, hence it cannot yield Global Asymptotic Stability (GAS) directly. The LaSalle argument proposed in [16] can be used, but it is long. Alternatively, we will show that the Jacobian of (11) (reduced to the invariant space for a fixed N_r) is robustly non-degenerate. This, coupled with the RLF, implies the GAS of any steady-state [17], [13].

To prove non-degeneracy, it has been shown in [18], [13] that the Jacobian J of (11) at any point in the space can be written as $J = \sum_{\ell=1}^{L} \rho_\ell Q_\ell$ for some $\rho_\ell \geq 0$, rank-one matrices Q_ℓ and some L. Here, $L = M(2 + s(2n + 1))$. The coefficients $\{\rho_\ell\}$ correspond to the partial derivatives of the rates $\{R_j^{pi}\}, \{R_p^{\pm}\}$, while $\{Q_\ell\}$ correspond to the network structure and are independent of the rates. Furthermore, it has been shown also [13] that the existence of an RLF implies that it sufficient to find

one positive point $\rho^* = (\rho_1^*, .., \rho_L^*)$ for which the (reduced) Jacobian is non-degenerate to show that is non-degenerate for all $\rho_\ell > 0$. We will find that point next by studying the structure of the Jacobian.

Similar to a single pool [11, SI], it can be easily seen that J has non-negative off-diagonals and strictly negative diagonals (i.e, J is Metzler). In addition, conservation of the number of ribosomes implies that $\mathbf{1}^T J = 0$. By the definition of the Jacobian, all the entries in each column contain only the partial derivatives with respect to the state variable associated to the column. Hence, we can choose the corresponding ρ_ℓ's such the diagonal entry in each column is scaled to -1. Therefore, we consider the Jacobian evaluated at the chosen point ρ^* such that $J^* = P - I$, where I is the identity matrix and P a nonnegative irreducible column-stochastic matrix. By Perron-Frobenius Theorem, P has a maximal eigenvalue 1 with algebraic multiplicity 1. Therefore, J^* has a single eigenvalue at 0 and the remaining eigenvalues have strictly negative real-parts. Hence, the reduced Jacobian at ρ^* is non-degenerate. Robust non-degeneracy and GAS follows.

The existence of a steady-state follows from Brouwer's fixed point theorem since (11) evolves in a compact space (for a fixed $N_r > 0$), and uniqueness follows from non-degeneracy and GAS. The positivity of the steady-state follows from persistence of the ORFM which can be shown graphically by the absence of critical siphons [19]. ■

Acknowledgements: This research was partially funded by NSF grants 1849588 and 1716623. Jared Miller thanks Prof. Mario Sznaier for his support and discussions.

REFERENCES

[1] O. Rackham and J.W. Chin. A network of orthogonal ribosome·mRNA pairs. *Nature Chemical Biology*, 1(3):159–166, 2005.

[2] A. Costello and A.H. Badran. Synthetic biological circuits within an orthogonal central dogma. *Trends in Biotechnology*, In press, 2020.

[3] L.M. Chubiz and C.V. Rao. Computational design of orthogonal ribosomes. *Nucleic acids research*, 36(12):4038–4046, 2008.

[4] C.T. MacDonald, J.H. Gibbs, and A.C. Pipkin. Kinetics of biopolymerization on nucleic acid templates. *Biopolymers: Original Research on Biomolecules*, 6(1):1–25, 1968.

[5] C.T. MacDonald and J.H. Gibbs. Concerning the kinetics of polypeptide synthesis on polyribosomes. *Biopolymers: Original Research on Biomolecules*, 7(5):707–725, 1969.

[6] S. Reuveni, I. Meilijson, M. Kupiec, E. Ruppin, and T. Tuller. Genome-scale analysis of translation elongation with a ribosome flow model. *PLoS Comput Biol*, 7(9):e1002127, 2011.

[7] G. Poker, Y. Zarai, M. Margaliot, and T. Tuller. Maximizing protein translation rate in the non-homogeneous ribosome flow model: a convex optimization approach. *Journal of The Royal Society Interface*, 11(100):20140713, 2014.

[8] Y. Zarai, M. Margaliot, E.D. Sontag, and T. Tuller. Controllability analysis and control synthesis for the ribosome flow model. *IEEE/ACM Trans. Comput. Biol. Bioinf.*, 15(4):1351–1364, 2017.

[9] M. Margaliot and T. Tuller. Ribosome flow model with positive feedback. *J. R. Soc., Interface*, 10(85):20130267, 2013.

[10] A. Raveh, Y. Zarai, M. Margaliot, and Tamir Tuller. Ribosome flow model on a ring. *IEEE/ACM transactions on computational biology and bioinformatics*, 12(6):1429–1439, 2015.

[11] A. Raveh, M. Margaliot, E.D. Sontag, and T. Tuller. A model for competition for ribosomes in the cell. *Journal of The Royal Society Interface*, 13(116):20151062, 2016.

[12] A.P.S. Darlington, J. Kim, J.I. Jiménez, and D.G. Bates. Dynamic allocation of orthogonal ribosomes facilitates uncoupling of co-expressed genes. *Nature Communications*, 9(1):695, 2018.

[13] M. Ali Al-Radhawi, D. Angeli, and E.D. Sontag. A computational framework for a Lyapunov-enabled analysis of biochemical reaction networks. *Plos Computational Biology*, 16(2):e1007681, 2020.

[14] M. Ali Al-Radhawi and D. Angeli. Piecewise linear in rates Lyapunov functions for complex reaction networks. In *Proceedings of the 52nd IEEE Control and Decision Conference (CDC)*, pages 4595–4600, 2013.

[15] F. Blanchini and G. Giordano. Piecewise-linear Lyapunov functions for structural stability of biochemical networks. *Automatica*, 50(10):2482 – 2493, 2014.

[16] M. Ali Al-Radhawi and D. Angeli. New approach to the stability of chemical reaction networks: Piecewise linear in rates Lyapunov functions. *IEEE Trans. on Automatic Control*, 61(1):76–89, 2016.

[17] F. Blanchini and G. Giordano. Polyhedral Lyapunov functions structurally ensure global asymptotic stability of dynamical networks iff the Jacobian is non-singular. *Automatica*, 86:183–191, 2017.

[18] M. Ali Al-Radhawi and D. Angeli. Robust Lyapunov functions for complex reaction networks: An uncertain system framework. In *Proceedings of the IEEE 53rd Conference on Decision and Control (CDC)*, pages 3101–3106, Dec 2014.

[19] D. Angeli, P. De Leenheer, and E.D. Sontag. A Petri net approach to the study of persistence in chemical reaction networks. *Mathematical Biosciences*, 210(2):598–618, 2007.