arXiv:2006.15994v2 [cs.CL] 30 Jun 2020

IMPROVING SEQUENCE TAGGING FOR VIETNAMESE TEXT USING TRANSFORMER-BASED NEURAL MODELS

A PREPRINT

Bùi Thế Việt[1], **Trần Thị Oanh**[1,2], **Lê Hồng Phương**[1,2]
(1) FPT Technology Research Institute, FPT University
(2) Vietnam National University, Hanoi

June 29, 2020

ABSTRACT

This paper describes our study on using mutilingual BERT embeddings and some new neural models for improving sequence tagging tasks for the Vietnamese language. We propose new model architectures and evaluate them extensively on two named entity recognition datasets of VLSP 2016 and VLSP 2018, and on two part-of-speech tagging datasets of VLSP 2010 and VLSP 2013. Our proposed models outperform existing methods and achieve new state-of-the-art results. In particular, we have pushed the accuracy of part-of-speech tagging to 95.40% on the VLSP 2010 corpus, to 96.77% on the VLSP 2013 corpus; and the F_1 score of named entity recognition to 94.07% on the VLSP 2016 corpus, to 90.31% on the VLSP 2018 corpus. Our code and pre-trained models viBERT and vELECTRA are released as open source to facilitate adoption and further research.

1 Introduction

Sequence modeling plays a central role in natural language processing. Many fundamental language processing tasks can be treated as sequence tagging problems, including part-of-speech tagging and named-entity recognition. In this paper, we present our study on adapting and developing the multi-lingual BERT [1] model for improving Vietnamese part-of-speech tagging (PoS) and named entity recognition (NER).

Many natural language processing tasks have been shown to be greatly benefited from large network pre-trained models. In recent years, these pre-trained models has led to a series of breakthroughs in language representation learning [2, 3, 1, 4, 5]. Current state-of-the-art representation learning methods for language can be divided into two broad approaches, namely *denoising auto-encoders* and *replaced token detection*.

In the denoising auto-encoder approach, a small subset of tokens of the unlabelled input sequence, typically 15%, is selected; these tokens are masked (e.g., BERT [1]), or attended (e.g., XLNet [4]); and then train the network to recover the original input. The network is mostly transformer-based models which learn bidirectional representation. The main disadvantage of these models is that they often require a substantial compute cost because only 15% of the tokens per example is learned while a very large corpus is usually required for the pre-trained models to be effective. In the replaced token detection approach, the model learns to distinguish real input tokens from plausible but syntheticallly generated replacements (e.g., ELECTRA [5]) Instead of masking, this method corrupts the input by replacing some tokens with samples from a proposal distribution. The network is pre-trained as a discriminator that predicts for every token whether it is an original or a replacement. The main advantage of this method is that the model can learn from all input tokens instead of just the small masked-out subset. This is therefore much more efficient, requiring less than $1/4$ of compute cost as compared to RoBERTa [6] and XLNet [4].

Both of the approaches belong to the fine-tuning method in natural language processing where we first pretrain a model architecture on a language modeling objective before fine-tuning that same model for a supervised downstream task. A major advantage of this method is that few parameters need to be learned from scratch.

In this paper, we propose some improvements over the recent transformer-based models to push the state-of-the-arts of two common sequence labeling tasks for Vietnamese. Our main contributions in this work are:

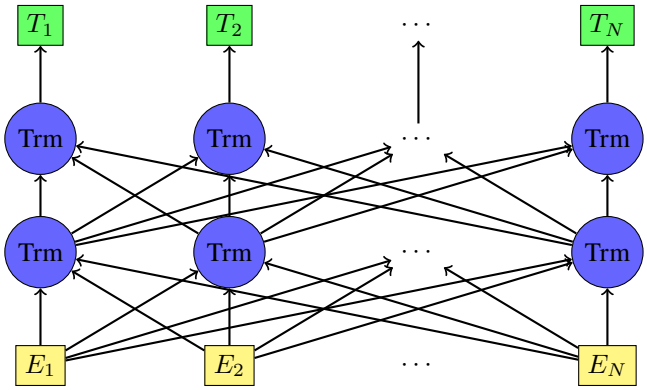

Figure 1: The basic structure of BERT

- We propose pre-trained language models for Vietnamese which are based on BERT and ELECTRA architectures; the models are trained on large corpora of 10GB and 60GB uncompressed Vietnamese text.
- We propose the fine-tuning methods by using attentional recurrent neural networks instead of the original fine-tuning with linear layers. This improvement helps improve the accuracy of sequence tagging.
- Our proposed system achieves new state-of-the-art results on all the four PoS tagging and NER tasks: achieving 95.04% of accuracy on VLSP 2010, 96.77% of accuracy on VLSP 2013, 94.07% of F_1 score on NER 2016, and 90.31% of F_1 score on NER 2018.
- We release code as open source to facilitate adoption and further research, including pre-trained models viBERT and vELECTRA.

The remainder of this paper is structured as follows. Section 2 presents the methods used in the current work. Section 3 describes the experimental results. Finally, Section 4 concludes the papers and outlines some directions for future work.

2 Models

2.1 BERT Embeddings

2.1.1 BERT

The basic structure of BERT [1] (*Bidirectional Encoder Representations from Transformers*) is summarized on Figure 1 where Trm are transformation and E_k are embeddings of the k-th token.

In essence, BERT's model architecture is a multilayer bidirectional Transformer encoder based on the original implementation described in [7]. In this model, each input token of a sentence is represented by a sum of the corresponding token embedding, its segment embedding and its position embedding. The WordPiece embeddings are used; split word pieces are denoted by ##. In our experiments, we use learned positional embedding with supported sequence lengths up to 256 tokens.

The BERT model trains a deep bidirectional representation by masking some percentage of the input tokens at random and then predicting only those masked tokens. The final hidden vectors corresponding to the mask tokens are fed into an output softmax over the vocabulary. We use the whole word masking approach in this work.

In our experiment, we start with the open-source mBERT package[1]. We keep the standard hyper-parameters of 12 layers, 768 hidden units, and 12 heads.

The output of BERT is computed as follows [3]:

$$B_k = \gamma \left(w_0 E_k + \sum_{k=1}^{m} w_i h_{ki} \right),$$

where

[1] https://github.com/google-research/bert/blob/master/multilingual.md

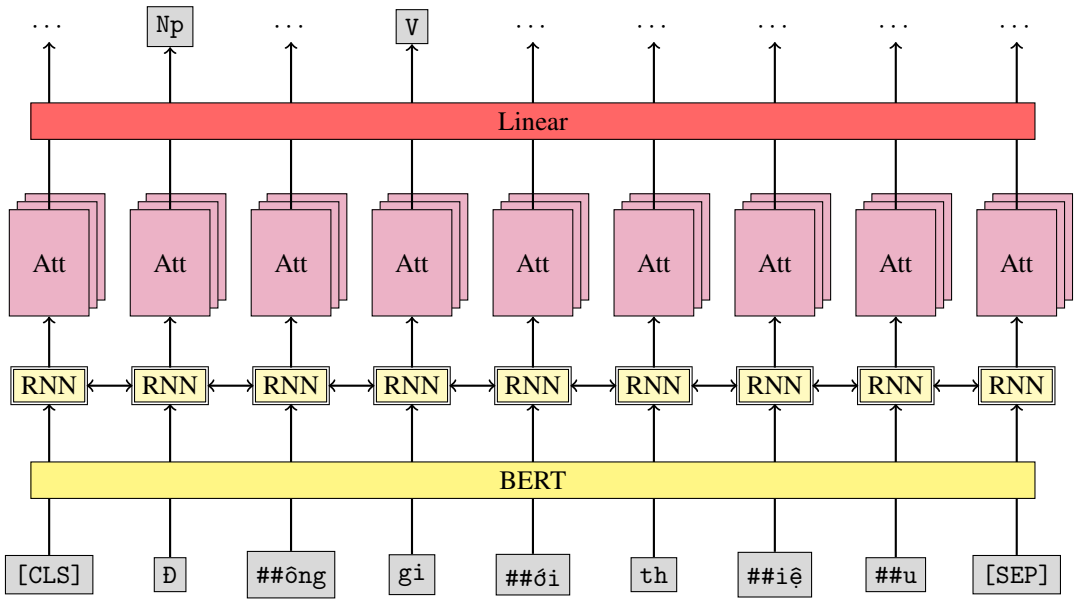

Figure 2: Our proposed end-to-end architecture

- B_k is the BERT output of k-th token;
- E_k is the embedding of k-th token;
- m is the number of hidden layers of BERT;
- h_{ki} is the i-th hidden state of of k-th token;
- $\gamma, w_0, w_1, \ldots, w_m$ are trainable parameters.

2.1.2 Proposed Architecture

Our proposed architecture contains five main layers as follows:

1. The input layer encodes a sequence of tokens which are substrings of the input sentence, including ignored indices, padding and separators;
2. A BERT layer;
3. A bidirectional RNN layer with either LSTM or GRU units;
4. An attention layer;
5. A linear layer;

A schematic view of our model architecture is shown in Figure 2.

2.2 ELECTRA

ELECTRA [5] is currently the latest development of BERT-based model where a more sample-efficient pre-training method is used. This method is called replaced token detection. In this method, two neural networks, a generator G and a discriminator D, are trained simultaneously. Each one consists of a Transformer network (an encoder) that maps a sequence of input tokens $\vec{x} = [x_1, x_2, \ldots, x_n]$ into a sequence of contextualized vectors $h(\vec{x}) = [h_1, h_2, \ldots, h_n]$. For a given position t where x_t is the masked token, the generator outputs a probability for generating a particular token x_t with a softmax distribution:

$$p_G(x_t|\vec{x}) = \frac{\exp(x_t^\top h_G(\vec{x})_t)}{\sum_u \exp(u_t^\top h_G(\vec{x})_t)}.$$

For a given position t, the discriminator predicts whether the token x_t is "real", i.e., that it comes from the data rather than the generator distribution, with a sigmoid function:

$$D(\vec{x}, t) = \sigma\left(w^\top h_D(\vec{x})_t\right)$$

3 Experiments

3.1 Experimental Settings

3.1.1 Model Training

To train the proposed models, we use a CPU (Intel Xeon E5-2699 v4 @2.20GHz) and a GPU (NVIDIA GeForce GTX 1080 Ti 11G). The hyper-parameters that we chose are as follows: maximum sequence length is 256, BERT learning rate is $2E-05$, learning rate is $1E-3$, number of epochs is 100, batch size is 16, use apex and BERT weight decay is set to 0, the Adam rate is $1E-08$. The configuration of our model is as follows: number of RNN hidden units is 256, one RNN layer, attention hidden dimension is 64, number of attention heads is 3 and a dropout rate of 0.5.

To build the pre-training language model, it is very important to have a good and big dataset. This dataset was collected from online newspapers[2] in Vietnamese. To clean the data, we perform the following pre-processing steps:

- Remove duplicated news
- Only accept valid letters in Vietnamese
- Remove too short sentences (less than 4 words)

Finally, we obtained approximately 10GB of texts. This dataset was used to further pre-train the mBERT to build our viBERT which better represents Vietnamese texts. About the vocab, we removed insufficient vocab from mBERT because its vocab contains ones for other languages. This was done by keeping only vocabs existed in the dataset.

In pre-training vElectra, we collect more data from two sources:

- NewsCorpus: 27.4 GB[3]
- OscarCorpus: 31.0 GB[4]

Totally, with more than 60GB of texts, we start training different versions of vELECTRA.

3.1.2 Testing and evaluation methods

In performing experiments, for datasets without development sets, we randomly selected 10% for fine-tuning the best parameters.

To evaluate the effectiveness of the models, we use the commonly-used metrics which are proposed by the organizers of VLSP. Specifically, we measure the accuracy score on the POS tagging task which is calculated as follows:

$$Acc = \frac{\#of_words_correcly_tagged}{\#of_words_in_the_test_set}$$

and the F_1 score on the NER task using the following equations:

$$F_1 = 2 * \frac{Pre * Rec}{Pre + Rec}$$

where *Pre* and *Rec* are determined as follows:

$$Pre = \frac{NE_true}{NE_sys}$$

$$Rec = \frac{NE_true}{NE_ref}$$

where *NE_ref* is the number of NEs in gold data, *NE_sys* is the number of NEs in recognizing system, and *NE_true* is the number of NEs which is correctly recognized by the system.

[2] vnexpress.net, dantri.com.vn, baomoi.com, zingnews.vn, vitalk.vn, etc.

[3] `https://github.com/binhvq/news-corpus`

[4] `https://traces1.inria.fr/oscar/`

Table 1: Performance of our proposed models on the POS tagging task

No.		**VLSP 2010**			**VLSP 2013**		
Existing models							
1		MEM[8]		93.4	RDRPOSTagger[9]		95.1
2		-			BiLSTM-CNN-CRF[10]		95.4
3					VnCoreNLP-POS[11]		95.9
4					jointWPD[12]		96.0
5					PhoBERT_base[13]		96.7
Proposed models							
	Model Name	**mBERT**	**viBERT**	**vElec**	**mBERT**	**viBERT**	**vElec**
1.	+Fine-Tune	94.34	95.07	95.35	96.35	96.60	96.62
2.	+BiLSTM	94.34	95.12	95.32	96.38	96.63	**96.77**
3.	+BiGRU	94.37	95.13	95.37	96.45	96.68	96.73
4.	+BiLSTM_Attn	94.37	95.12	**95.40**	96.36	96.61	96.61
5.	+BiGRU_Attn	94.41	95.13	95.35	96.33	96.56	96.55

3.2 Experimental Results

3.2.1 On the POS tagging task

Table 1 shows experimental results using different proposed architectures on the top of mBERT and viBERT and vELECTRA on two benchmark datasets from the campaign VLSP 2010 and VLSP 2013.

As can be seen that, with further pre-training techniques on a Vietnamese dataset, we could significantly improve the performance of the model. On the dataset of VLSP 2010, both viBERT and vELECTRA significantly improved the performance by about 1% in the F_1 scores. On the dataset of VLSP 2013, these two models slightly improved the performance.

From the table, you can also see the performance of different architectures including fine-tuning, BiLSTM, biGRU, and their combination with attention mechanisms. Fine-tuning mBERT with linear functions in several epochs could produce nearly SOTA results. It is also shown that building different architectures on top slightly improve the performance of all mBERT, viBERT and vELECTRA models. On the VLSP 2010, we got the accuracy of 95.40% using biLSTM with attention on top of vELECTRA. On the VLSP 2013 dataset, we got 96.77% in the accuracy scores using only biLSTM on top of vELECTRA.

In comparison to previous work, our proposed model - vELECTRA - outperformed previous ones. It achieved from 1% to 2% higher than existing work using different innovation in deep learning such as CNN, LSTM, and joint learning techniques. Moreover, vELECTRA also gained a slightly better than PhoBERT_base, the same pre-training language model released so far, by nearly 0.1% in the accuracy score.

3.2.2 On the NER task

Table 2 shows experimental results using different proposed architectures on the top of mBERT, viBERT and vELECTRA on two benchmark datasets from the campaign VLSP 2016 and VLSP 2018.

These results once again gave a strong evidence to the above statement that further training mBERT on a small raw dataset could significantly improve the performance of transformation-based language models on downstream tasks. Training vELECTRA from scratch on a big Vietnamese dataset could further enhance the performance. On two datasets, vELECTRA improve the F_1 score by from 1% to 3% in comparison to viBERT and mBERT.

Looking at the performance of different architectures on top of these pre-trained models, we acknowledged that biLSTM with attention once a gain yielded the SOTA result on VLSP 2016 dataset. On VLSP 2018 dataset, the architecture of biGRU yielded the best performance at 90.31% in the F_1 score.

Comparing to previous work, the best proposed model outperformed all work by a large margin on both datasets.

Table 2: Performance of our proposed models on the NER task. ZA-NER is the best system joining VLSP 2018 [14]

No.		**VLSP 2016**			**VLSP 2018**		
Existing models							
2		VnCoreNLP-NER[15]		88.6	VietNER[16]		76.63
3		VNER[16]		89.6	ZA-NER[17]		74.70
4		ETNLP[18]		91.1			
5		PhoBERT_base[13]		93.6			
Proposed models							
	Model Name	**mBERT**	**viBERT**	**vElec**	**mBERT**	**viBERT**	**vElec**
1.	+Fine-Tune	91.28	92.84	94.00	86.86	88.04	89.79
2.	+BiLSTM	91.03	93.00	93.70	86.62	88.68	89.92
3.	+BiGRU	91.52	93.44	93.93	86.72	88.98	**90.31**
4.	+BiLSTM_Attn	91.23	92.97	**94.07**	87.12	89.12	90.26
5.	+BiGRU_Attn	90.91	93.32	93.27	86.33	88.59	89.94

3.3 Testing time

4 Conclusion

This paper presents some new model architectures for sequence tagging and our eperimental results for Vietnamese part-of-speech tagging and named entity recognition. Our proposed model vELECTRA outperforms previous ones. For part-of-speech tagging, it improves about 2% of absolute point in comparison with existing work which use different innovation in deep learning such as CNN, LSTM, or joint learning techniques. For named entity recognition, the vELECTRA outperforms all previous work by a large margin on both VLSP 2016 and VLSP 2018 datasets.

Our code and pre-trained model will be published as an open source project for facilitate adoption and further research in the Vietnamese language processing community.[5] A variant and more advanced version of this model is currently deployed as a core component of our commercial chatbot engine FPT.AI[6] which are serving effectively many customers.

References

[1] J. Devlin, M.-W. Chang, K. Lee, and K. Toutanova, "BERT: Pre-training of deep bidirectional transformers for language understanding," in *Proceedings of NAACL*, Minnesota, USA, 2019, pp. 1–16.

[2] A. Radford, K. Narasimhan, T. Salimans, and I. Sutskever, "Improving language understanding by generative pre-training," in *Preprint*, 2018.

[3] M. E. Peters, M. Neumann, M. Iyyer, M. Gardner, C. Clark, K. Lee, and L. Zettlemoyer, "Deep contextualized word representations," in *Proceedings of NAACL*, Louisiana, USA, 2018, pp. 1–15.

[4] Z. Yang, Z. Dai, Y. Yang, J. Carbonell, R. Salakhutdinov, and Q. V. Le, "XLNet: Generalized autoregressive pretraining for language understanding," in *Proceedings of NeurIPS*, 2019, pp. 5754–5764.

[5] K. Clark, M.-T. Luong, Q. V. Le, and C. D. Manning, "ELECTRA: Pre-training text encoders as discriminators rather than generators," in *Proceedings of ICLR*, 2020.

[6] Y. Liu, M. Ott, N. Goyal, J. Du, M. Joshi, D. Chen, O. Levy, M. Lewis, L. Zettlemoyer, and V. Stoyanov, "RoBERTa: A robustly optimized BERT pretraining approach," in *Preprint*, 2019.

[7] A. Vaswani, N. Shazeer, N. Parmar, J. Uszkoreit, L. Jones, A. N. Gomez, Łukasz Kaiser, and I. Polosukhin, "Attention is all you need," in *Proceedings of NIPS*, 2017.

[8] P. Le-Hong, A. Roussanaly, T. M. H. Nguyen, and M. Rossignol, "An empirical studyof maximum entropy approach for part-of-speech tagging of Vietnamese texts," in *Traitement Automa-tique des Langues Naturelles - TALN 2010, ATALA (Association pour le Traitement Automatique desLangues), Jul 2010, Montréal, Canada*, 2010, p. 12 pages.

[9] D. Q. Nguyen, D. Q. Nguyen, and a. S. B. P. Dang Duc Pham, "RDRPOSTagger: A ripple down rules-based part-of-speech tagger," in *In Proceedings of the Demonstrations at EACL*, 2014, pp. 17–20.

[5] A GitHub repository and a demo website will be available online soon.

[6] `http://fpt.ai/`

[10] X. Ma and E. Hovy, "End-to-end sequence labeling via bi-directional LSTM-CNNs-CRF," in *In Proceedings of ACL*, 2016, pp. 1064–1074.

[11] D. Q. Nguyen, T. Vu, D. Q. Nguyen, MarkDras, and M. Johnson, "From word segmen-tation to pos tagging for vietnamese," in *In Proceedings of ALTA*, 2017, pp. 108–113.

[12] D. Q. Nguyen, "A neural joint model for vietnamese word segmentation, POS tagging and dependency parsing," in *In Proceedings of ALTA*, 2019, pp. 28–34.

[13] D. Q. Nguyen and A. T. Nguyen, "Phobert: Pre-trained language models for vietnamese," in *https://arxiv.org/pdf/2003.00744.pdf*, 2020.

[14] N. T. M. Huyen, N. T. Quyen, V. X. Luong, T. M. Vu, and N. T. T. Hien, "VLSP shared task: Named entity recognition," *Journal of Computer Science and Cybernetics*, vol. 34, no. 4, pp. 283–294, 2018.

[15] T. Vu, D. Q. Nguyen, D. Q. Nguyen, MarkDras, and M. Johnson, "Vncorenlp: Avietnamese natural language processing toolkit," in *In Proceedings of NAACL: Demonstrations*, 2018, pp. 56–60.

[16] K. A. Nguyen, N. Dong, , and C.-T. Nguyen, "Attentive neural network for named entity recognition in Vietnamese," in *In Proceedings of RIVF*, 2019.

[17] L. K. P. Viet-Thang Luong, "ZA-NER: Vietnamese named entity recognition at VLSP 2018 evaluation campaign," in *In the proceedings of VLSP workshop 2018*, 2018.

[18] X.-S. Vu, T. Vu, S. Tran, and L. Jiang, "ETNLP: A visual-aided systematic approach to select pre-trained embeddings for a downstream task," in *In Proceedings of RANLP*, 2019, pp. 1285–1294.