arXiv:1611.05125v1 [cs.CV] 16 Nov 2016

Learning To Score Olympic Events

Paritosh Parmar and Brendan Tran Morris
University of Nevada, Las Vegas
parmap1@unlv.nevada.edu, brendan.morris@unlv.edu

Abstract

While action recognition has been addressed extensively in the field of computer vision, action quality assessment has not been given much attention. Estimating action quality is crucial in areas such as sports and health care, while being useful in other areas like video retrieval. Unlike action recognition, which has millions of examples to learn from, the action quality datasets that are currently available are small – typically comprised of only a few hundred samples. We develop quality assessment frameworks which use SVR, LSTM and LSTM-SVR on top of spatiotemporal features learned using 3D convolutional neural networks (C3D). We demonstrate an efficient training mechanism for action quality LSTM suitable for limited data scenarios. The proposed systems show significant improvement over existing quality assessment approaches on the task of predicting scores of Olympic events both with short-time length actions (10m platform diving) and long-time length actions (figure skating short program). While SVR based frameworks yields better results, LSTM based frameworks are more intuitive and natural for describing the action, and can be used for improvement feedback.

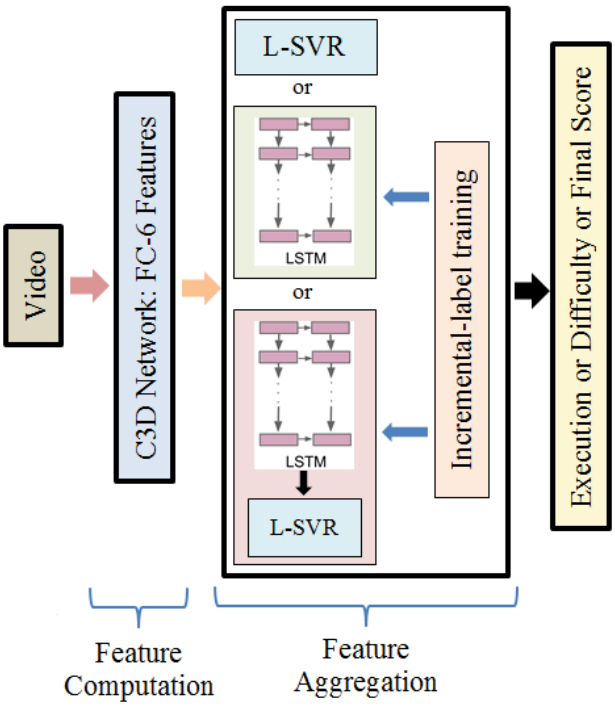

Figure 1. Overview of our approach.

1. Introduction

Action quality assessment refers to how well a person performed an action. Automatic action quality assessment has applications in many fields like sports and health care. For example, an injured player can be monitored during rehabilitation to track performance and improvement and provide feedback on which exercises require extra attention. Similarly, those with mobility diseases which require significant exercise repetition, like cerebral palsy, could be monitored at-home without the expense and inconvenience from in-office visits to a physical therapist.

Compared to action recognition, action quality assessment has received much less attention. There are some differences between action recognition and action quality measurement. Firstly, typically for action recognition task, there is a significant amount of difference between two different classes of actions, where as in case of action quality measurement, the difference could be subtle. Secondly, while it has been shown that an action class can be recognized by "seeing" only a part of the action [3], it is not meaningful to measure the quality of an action by seeing only a small part of the whole action. It is not meaningful because, there is a possibility that the performer will make an error at any given segment of the action. As an example, a diver may be perfect through the air but fail to enter the water perpendicularly and make a large splash which is reflected as a poor overall dive score. Therefore, if the dive was judged just by a short clip while the diver was in the air, the resulting perfect score would poorly correlate with the actual action quality. However, if the whole action clip were taken into account, the diver would have had been penalized for erro-

neous entry into the water.

Convolutional neural networks, in particular the recently proposed 3D neural network (C3D) [8], are increasingly being used for action recognition [action recognition papers]. To train deep networks, large datasets are needed. For action recognition, many datasets such as UCF101 [7], HMDB51 [4] and Sports-1M [3] are available. Compared to action recognition, fewer action quality datasets [5, 10] are available and, in addition, action recognition datasets have millions of samples while the Diving Quality dataset [6] contains just 159 samples. Action recognition dataset can be increased in size by mining websites like YouTube using a script, whereas, increasing action quality dataset requires qualified human annotations to score the action, which makes it more labor intensive. While 3D CNNs are used for learning spatiotemporal features, recurrent neural networks are used for capturing temporal evolution of a video.

There is a trade-off between C3D clip length, resolution of input frames and performance. Original C3D network gave a compact representation of 16 frames (16 frames = one clip) of a video. At a cost of lower resolution, clip length was increased from 16 frames to up to 100 frames in [9]. However, decreasing resolution, while keeping clip length constant, was shown in [8] to result in poorer performance. C3D features capture appearance in the beginning of a clip and thereafter, it captures salient motion. Since, both appearance and salient motion, are captured by C3D features, we would like to make use of them in assessing quality of an action.

When developing an action quality framework, it is critical to respect the constraint of small dataset size. In this paper, we propose multiple frameworks that use visual information for action quality assessment and evaluate on short-time length action (diving) and long-time length action (figure skating). Results show significant improvements over state-of-the-art [6, 10] for predicting the score of Olympic sports. The major contribution of this work can be summarized as follows:

- We increase the existing diving dataset from 159 samples [6] to 370 samples.
- We propose multiple approaches for action quality assessment which makes use of visual information directly unlike existing approaches which utilize noisy human pose information [6, 10]. The shortcomings of human pose based approaches are discussed in the following section.
- We show how to effectively train LSTM layers on C3D features for action quality assessment with improved prediction quality and reduced training time by about 70%.
- We show that an error can be detected with our LSTM based approaches, i.e., it is possible to determine in which segments of an action, an error was made. Such a feature aids with faster feedback.

2. Related Work

Only a handful of works directly address the problem of action quality assessment [6, 5, 10, 15, 12]. Wnuk and Soatto introduced FINA09 dataset in [12]. They do a pilot study and conclude that, temporal information, which is implicitly present in videos, is vital, and estimation of human pose using HoG features is relaible. Human pose features have been used in [6, 10] to assess action quality of Olympic sporting events. In [6], a pose estimator is run on every relevant frame and concatenate to form a large action descriptor. The descriptor is post-processed (DCT, DFT) into features which are used for estimating the parameters of a regression model to predict the event scores (quality). Venkataraman et. al, using the estimated pose for each frame, calculate the approximate entropy features and concatenate them to get a high-dimensional feature vector. Their feature vector better encodes dynamical information than DCT. One of the drawbacks of using human poses as a feature is that the final results are affected by incorrectly estimated poses.

In particular, pose estimation has been shown to be challenging on diving and figure skating datasets [6] due to atypical body positions. Using only human poses as features, ends up in neglecting important visual cues like water splash created when entering water during a dive. Also, following post processing, pose features become relative to the head and not absolute to the video frame, which results in ambiguities like whether or not the diver was perpendicular to the water during his/her entry. In diving, both the perpendicular entry and splash contribute directly to the final score. We propose to use visual information instead of human pose, because we hypothesize that appearance and motion information captured by C3D features would be more accurate and revealing of the quality of an action as compared to human pose information. Further, Olympic sports have clear rules for scoring, e.g. dives have two components for quality: *execution score* and *difficulty score*. The final score is the product of these two scores. Existing approaches [6, 10] don't predict execution score and difficulty score individually, rather they predict the final score. In this work, we try to predict component scores as well as final score, and discuss which strategy is better.

In contrast to quality assessment in sports, Zia et al. proposed an approach to assess surgical skills [15]. They extract spatiotemporal interest points (STIP) and then compute HoG-HoF descriptor for those points. Moving parts in the video like surgeon's hands and tools are determined by clustering STIP's. A time series of moving parts is then built. Since the process of surgery is an activity composed

of shorter repetitive actions, they transform the time series into frequency domain, which is followed by feature selection. Finally, a classifier is learned, which is then used to identify surgeon's skill level.

Another work treated quality assessment as a classification problem [5] where the goal is to identify if an exercise repetition contained any execution errors. They use Microsoft Kinect to capture 3D positions of various body joints. However, their approach can only tell if the repetition was "good" (didn't contain any error) or "bad" (contained errors), but cannot tell how good or bad the given exercise repetition was. In this work, we treat the problem of quality assessment as a regression problem, therefore, we would be able to tell how well the action was carried out.

3. Approach

As indicated in previous section, we would like to leverage visual information instead of human pose information to assess quality of actions. We propose three frameworks for action quality assessment based on the smaller version of the C3D network [8]. In one framework, a SVR is built directly on C3D features; the second framework explicitly models the sequential nature of an action using an LSTM; and the final framework combines the LSTM with SVR.

3.1. C3D-SVR

To classify a given instance of action, Tran et al [8] divided the whole action video into clips of 16 frames. Then, C3D features for every clip was extracted. A video-level action descriptor was obtained by averaging the clip-level features temporally. The resulting feature vector was used as input to a SVM to output predicted action class. With this inspiration, the first variant on action quality assessment follows the same pipeline but replaces the SVM with a SVR. The clip-level features are obtained from the FC6 layer of the C3D network. The final feature vector is the temporal clip average and normalized which is used as input to the SVR trained using the action score (quality value). Note that through clip-level aggregation, the temporal evolution and timing of an action is lost.

3.2. C3D-LSTM

LSTM's [1] have memory cell, which facilitates to store and output information and thereby allowing to better discover temporal relationships. The value in the memory cell is maintained unless diminished by the *forget gate* or added to by the *input gate*.

Ng et. al, used multilayer LSTM's for feature aggregation of upto 120 frames [14], while Ye and Tian, use LSTM to embed sequential information between consecutive C3D clips and dense trajectories [11] [13], which is different from averaging the clip-level features to get a video-level description.

In this approach, we combine clip-level C3D features using LSTM layer to get the video-level description. Specifically, we use one LSTM layer for execution component and one LSTM layer for difficulty component. Each LSTM is followed one fully connected layer. FC-6 layer activations are fed into both of the LSTM layers. Execution scores are the targets for Execution-LSTM, while difficulty scores are targets for Difficulty-LSTM.

One of the advantages of using C3D features is that it gives one compact description for 16 frames. If we had used 2D CNN, instead of C3D, we would have had one description for each and every frame. Essentially, using C3D features we can represent the whole action instance with fewer time steps, than had we used individual frame-level description. For, let's suppose that an action instance is 145 frames long. Then, using C3D features, and a temporal stride of 16 frames, we can represent the whole action instance using just $145/16 = 9$ time steps; whereas if we had used frame-level description, our action instance would have been a $145/1 = 145$ time steps long. Generally, longer sequences need multiple LSTM layers to model the temporal evolution, while shorter sequences can be modeled efficiently using a single layer LSTM. Multi-layer LSTM would require more training samples, compared to that required for a single-layer LSTM. As indicated previously, action quality datasets are smaller. Therefore, we can justify our choice of using C3D features.

3.2.1 LSTM Final-Label Training

LSTM can be used for various mapping settings like one-to-one or many-to-one or many-to-many. The problem of action quality assessment is at heart a many-to-one mapping problem, because, given a stack of frames (or equivalently clips, like C3D clips), we want to predict a single score (execution or difficulty or final score). We refer to training a LSTM on a single final label as *final-label training*. In final-label training, all clips in a video are propagated through the LSTM network and the error is computed upon completion by comparison with the final video score s_F. We refer to training a LSTM on a single final label as *final-label training*. We use two LSTM's: one for execution score and the other for difficulty score. As the input for LSTM, we use the FC-6 layer activations from C3D network, and Euclidean distance as the loss function. So, there would be two losses with equal weights. Fixed learning rate policy, with a learning rate of 0.0001, is used. We randomly crop a video of 112 x 112 pixels, and randomly flip the input, as done in [8].

There are two sets of unknowns that need to be determined during *final-label training*. The first set of unknowns is the partial score attributed to different stages of an action. The second set of unknowns is the score of input clips (a

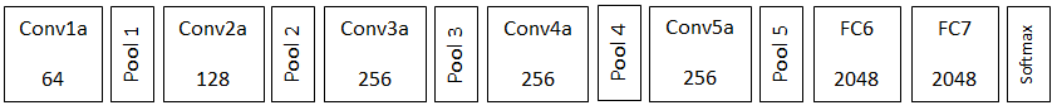

Figure 2. Smaller C3D architecture.

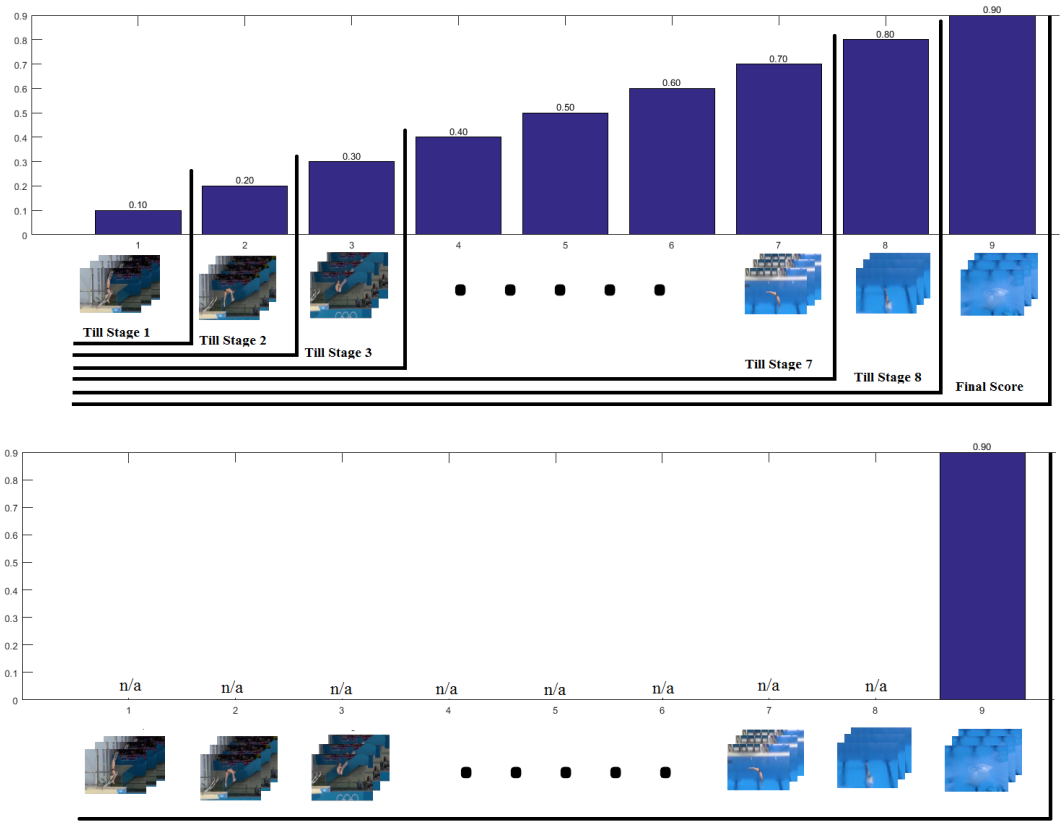

Figure 3. Difference between *incremental-label training* (top) and *final-label training* (bottom) .

stack of 16 frames). Other thing worth noticing is the small sizes of datasets (presently, less than 400 samples). Even with shorter sequences, we hypothesize that, it is still not efficient to use *final-label training*. We prove our hypothesis correct in Section 4.6.

3.2.2 LSTM Incremental-Label Training

On closer look, we expect that as the action advances in time, the score should start building up (if the quality is good enough) or be penalized (if the quality is sub par). For example, let's consider a two-somersault, one-and-half-twists dive. This dive can crudely be divided into various stages like diver's take-off, completing first somersault through air, completing second somersault through the air, completing all the twists, entering the water, etc. Each of these stages should have a small contribution in the final score. Following this intuition, score should be accumulated through an action in an increasing function.

To improve the LSTM training with limited data, we propose a new training protocol called *incremental-label training*. In incremental-label training, unlike final-label training, we use intermediate labels when training LSTM's instead of using just the final label s_F for the whole action instance. The intermediate label $s(t)$ for a given time step is supposed to indicate the score the accumulated up until the end of that time step. The concept of intermediate labels can be illustrated using Fig. 3.

The intermediate labels can be obtained in either supervised or unsupervised manner. In the supervised case, annotators must identify *sub-action* (smaller segment of an action) and the accumulate scores at each sub-action time. Considering the previous example of two-somersault, one-and-half twist dive, scores for the sub-actions like somersault and twists are standardized by the diving governing body, FINA. However, a C3D clip of 16 frames is not guar-

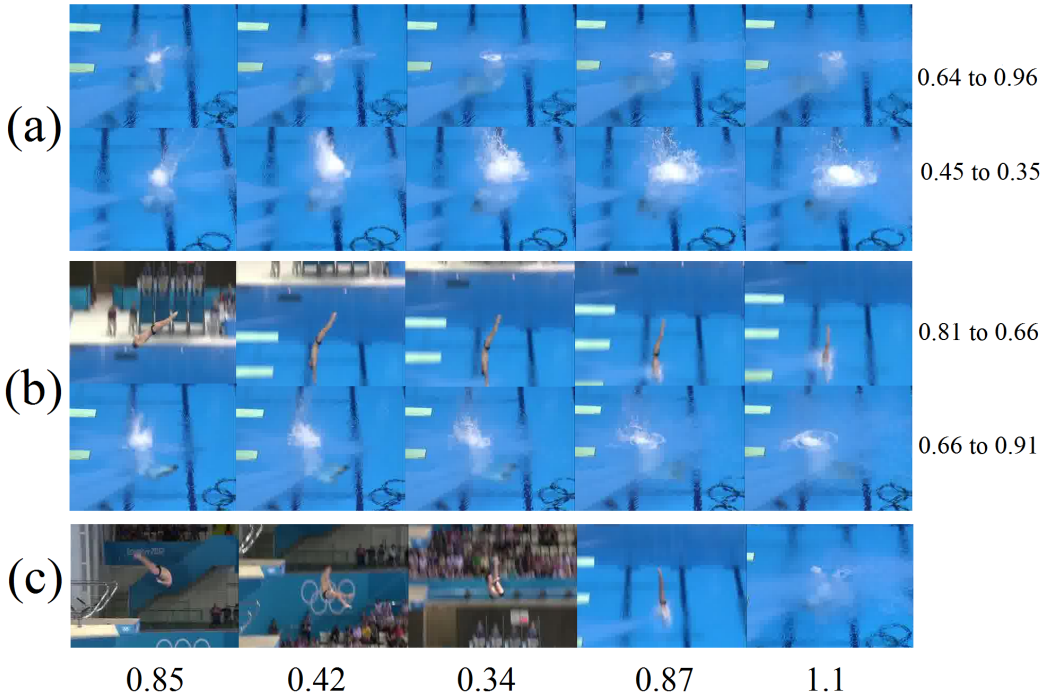

Figure 4. Error detection: (a) The first row shows a diver managing a 'ripping' - one with almost no splash, while the second row shows a bigger splash. The numbers on the side indicate that because of the ripping entry, diver's score increased, while the score for the second diver got reduced. (b) The first row shows the diver not entering the water in a vertical position, because of which his score during entry stage got adversely affected. Despite being not vertical, diver manages to make only small splash, for which he is rewarded and his score rises from 0.66 to 0.91. (c) The diver has a good take off from the platform, so LSTM lends him initially a good score of 0.85, but during somersault in pike position, his ankles fell apart, which reduced his score. His legs are not straight in pike position, which further reduces his score. Lastly, the diver is awarded for vertical entry and a very small splash.

anteed to cover an entire sub-action and annotation would need some other method to accurately assign sub-scores to partial sub-actions. This would require significant application and implementation knowledge and substantial labeling effort.

In contrast, the unsupervised assignment can save time and effort and provide a scalable solution. A video is divided into clips and the total score is evenly divided into each clip (each clip contributes the same amount of score). The intermediate score for each clip is

$$s(t) = \frac{t}{seq_len} \times s_F \tag{1}$$

where seq_len is the LSTM sequence length. The incremental-label training is used to guide the LSTM during the training phase to the final score with intermediate outputs. Since the unsupervised assignment does not strictly respect the sub-action scores, in practice, we utilize a two step training process. The LSTM is first trained for a few thousand iterations using incremental-label training. The model is then fine-tuned by using final-label training at a lower learning rate for some smaller number of iterations. The final-label fine-tuning works well in practice to loosen inaccurate score restrictions from the unsupervised incremental-labels.

3.3. C3D-LSTM-SVR

The last framework that we propose is C3D-LSTM-SVR. In C3D-LSTM-SVR, we train the C3D-LSTM as discussed previously but the output is not used directly for predicting the score. Instead, we use a SVR on top of the LSTM outputs to predict action quality score. This architecture provides explicit sequence and temporal modeling of an action while taking advantage of the shallow discriminative SVR for generalization in the face of limited data.

3.4. Error detection

Feedback is very helpful and desirable in action quality assessment scenarios, because ultimately we use action quality assessment to improve human subject's performance. Pirsiavash et al. generate a feedback proposal by first differentiating their scoring function with respect to joint locations, and then, by computing the maximum gradient, can find the joint and direction the subject must move

to bring the most improvement in the score [6]. In our case, we are not using human pose features, so we can not directly use such a feedback system.

As discussed earlier, the execution score, in case of a perfect (ideal) execution - one without any errors, should be an increasing function along the time. Unlike C3D-SVR, in C3D-LSTM and C3D-LSTM-SVR, we are modeling temporal evolution. We should expect to see an increasing accumulation of scores in case of a perfect execution. And likewise, in case of an imperfect execution, should not expect to see an increasing accumulation of scores. For example, let's suppose, there are nine time steps. Then, in case of a perfect execution, would look something like: $\{0.1, 0.2, 0.3, 0.4, 0.5, 0.6, 0.7, 0.8, 0.9\}$, and in case of a imperfect execution, it might look something like: $\{0.1, 0.2, 0.3, 0.4, 0.3, 0.4, 0.2, 0.3, 0.2\}$. For perfect execution, intermediate score for nth time step is equal to or greater than $(n-1)$th time step, which is not expected in case of an imperfect execution. Whenever the intermediate score from nth time step is less than $(n-1)$th time step, it is indicative of error being committed between $(n-1)$th and nth time steps. Therefore, from the intermediate scores, we would be able to pinpoint the time step at which an execution error was made. However, we won't be able to get a feedback on what went wrong and what ideally should have been done, but error detection does help by reducing the efforts spent in finding erroneous segments of an action sample. Error detection is illustrated in Fig. 4.

4. Experiments & Results

4.1. Datasets

Pirsiavash et al.[] introduced two action quality datasets from the 2012 London Olympics: 10m platform mens diving and figure skating [6]. Their diving datasets consisted of 159 samples the while figure skating dataset consisted of 171 samples. Dives are typically 4 s long (120 frames) while the skating short program is 2.5 minutes (4500 frames). In this work, the diving dataset was extended to 370 samples by including dives from semi-final and final rounds of 2012 Olympics. The datasets consist of RGB color broadcast video at resolution of 320×240 pixels. The diving annotations include the dive difficulty rating, the average execution score from all judges, and the final difficulty weighted score (= difficulty $\times$ execution). The figure skating annotations include the presentation, technical, and final scores. The diving dataset has more samples of short actions while skating provides and example of long actions with few examples.

4.2. Performance Metrics

Action quality assessment is posed as a regression problem to predict the quality "score", as such, Spearman rank correlation is used to measure performance. Higher ρ signifies better rank correlation between the true and predicted scores. This metric allows for non-linear relationship and emphasizes not the true score value but relative ranking (i.e. lower scores for poor examples and higher scores for better quality examples).

Feature	Correlation
conv5b	0.45
pool5	0.50
fc6	**0.55**
fc7	0.46

Table 1. Layer-wise correlation results.

.

4.3. Initial investigation

An initial investigation was performed on a smaller diving dataset with 110 training and 82 validation samples. Using 50-fold cross validation, it was found that FC6 of the full C3D architecture (pre-trained on Sports-1M) was the best layer for SVR regression (see Table 1). It was found that the smaller C3D (UCF-101) with $\rho = 0.63$ outperformed the full C3D (Sports-1M) $\rho = 0.55$. It was found that the resulting feature matrices for p clips (FC-6_dim $\times p$) were sparse. On average, 85% of the smaller network feature matrix was composed of zeros while the full network only had 79%. This sparsity effect was important for video-level description since the final feature descriptor in this work was the average of all p clip-level descriptors.

After completing the initial investigation for C3D architecture design, the full experimental evaluation of the quality assessment frameworks were testing using the full diving dataset (300 train and 70 test examples). All experiments are conducted using a fixed data split rather than through cross validation.

4.4. Diving Dataset

Olympic diving is scored by 7 independent judges who provide a raw score. Scores are in the range from 1-10 in increments of 0.5. The highest two and lowest two raw scores are discarded and the execution score is the sum of the remaining three scores. The final dive score is found as the execution score multiplied by the dive difficulty. Dive difficulty is known before the dive and is an agreed upon constant for each type of dive (e.g. forward 3.5 somersaults or back 2.5 somersaults 1.5 twists).

Since judges are provided with the difficulty score for every performance, we included this information in the score prediction process unlike previous work [6]. A comparison of the different frameworks on the diving dataset is provided in Table II. Note, the features used by [6] was augmented with difficulty score as well but it did not seem to improve performance of their approach.

Stride	Without difficulty score	With difficulty score
1	0.77	0.86
2	0.77	0.86
4	**0.78**	**0.86**
8	0.75	0.81
16	0.74	0.80

Table 2. Result of varying stride on diving dataset.

Method	Correlation
Hierarchical	0.45
C3D-SVR (without deduction information)	**0.50**
C3D-SVR (with deduction information)	**0.53**

Table 3. Figure skating dataset. Comparison with [6].

4.5. C3D-SVR

Diving: Having done the initial investigation, we use our new larger dataset for C3D-SVR. We use 300 training samples and the remaining 70 samples for testing purpose. Note that we would be using this datasplit for all the experiments from here on. Since our remaining two proposed frameworks are LSTM based, which requires much more time to train, as compared to SVR, we use only one datasplit for all the experiments, i.e. we would not repeat experiments on different random datasplits and then average the results. To have a fair comparison of our frameworks with existing methods, we obtain results for existing methods on our datasplit. Judges are provided with difficulty score for every performance [6]. We found that significantly better performance was obtained by C3D-SVR framework, when we augmented the video-level C3D features by including corresponding difficulty score. We also augmented the features used in [6] by including corresponding difficulty scores. However, we didn't find any improvement in the performance of their approach. We also studied the effect of temporal stride (lower the temporal stride, denser the sampling) on the performance of C3D-SVR framework. The results are presented in Table II. We found that C3D-SVR works best with 4 as the temporal stride, i.e. it denser sampling is better for action quality assessment. Also, we have not provided difficulty level.

Figure skating: We applied the same approach as diving to figure skating dataset. We used 100 samples for training, and the remaining 71 samples for testing. We repeat the experiments 200 times with different random datasplits, as done by authors in [6], and then average the results. We found very poor results - around 0.22 rank correlation. This was due to the reason that UCF-101 does not figure skating samples, therefore, the features for figure skating samples were not expressive enough. So, we replaced 'Yo-Yo' action samples with figure skating samples. We train the C3D network, from scratch, on this augmented UCF-101 dataset. Expectedly, we found better results. The results are provided in Table III.

4.6. C3D-LSTM

We implement our framework using Caffe [2]. For diving, we use a fixed number of frames, 151, for all the samples. We choose 151, because our longest diving sample was 151 frames long. Shorter sequences were padded with zero frames in the starting. C3D clip length is 16, while video length is 151, so our LSTM sequence length would be 9, when we use a temporal stride of 16.

Final-label training: C3D network was pretrained on UCF-101. We use the same datasplit as used for C3D-SVR. We found best results after training for 18000 iterations. During testing, we don't flip the input. The results were very poor: around 0.01 correlation.

Augmenting UCF-101: UCF-101 contains diving as one of the 101 action classes. Upon visual inspection, we found that diving samples from UCF-101 are different from our diving samples. We believe that, because of this difference, the C3D network is not able to give out very expressive description. To get better description from the C3D network, we augment the UCF-101 dataset by including our diving samples under the diving class.

After augmenting we found much better results - a correlation of 0.34 was observed in case of execution score, while correlation of only 0.02 was observed in case of difficulty score.

Incremental-label training: For incremental-label training we follow the same settings as final-label training, except, that we would be having intermediate labels alongwith the final label. In this case, optimization took just 5000 iterations, as compared to 18000 iterations in case of final-label training. After training using intermediate labels, we fine-tune the network using final scores for 2000 iterations using a decreased learning rate of 0.000001. We do not fine-tune to, necessarily, improve the performance, but to uplift the constraints levied upon by inaccurate incremental scoring.

Apart from faster optimization, the results were better as well. A correlation of 0.41 was observed for execution score, and 0.02 for difficulty score.

We limit the testing of LSTM based frameworks to short sequences, i.e. diving. The reason for doing so, is that the

figure skating samples are very long with fewer samples to train on.

We have used LSTM's with 256 hidden nodes. We check the effect of varying the number of nodes, but did not get much improvements. Adding a second LSTM layer did not help improve the performance either. This may be because of the increase in number of parameters on adding an extra layer. When using a stride of 16, with a clip-length of 16, it is not guaranteed that whole sub-actions would be covered by a clip. So, we tried using a denser sampling, with stride of 8 instead of 16. Decreasing the stride would result in longer LSTM sequence - LSTM sequence was now 17 instead of 9, which means LSTM has to address even longer dependency. Given the small size of the dataset, not surprisingly, results worsened with denser sampling.

Temporal data augmentation: With 151 total frames, stride of 16, and clip-length of 16, 6 last frames are left unused. We already have annotated longer samples, so no information is lost in unused frames. A clip consists of a chunk of 16 consecutive frames. In our case, a 151-frames video consists of 9 such clips. However, from a single 151-frames video, we can generate several groups of 9 clips. This can be done by, for example, changing the seed frame. Following this augmentation technique, we increased our training set from 300 samples to 1800 samples. With 6 representations of a single sample, we believe that LSTM would "see" those combination of frames that won't be present in a single representation of a video, which would ultimately help with robust modeling. We train in the way discussed previously, and test on the 70 test samples. Unexpectedly, the results were worse.

4.7. C3D-LSTM-SVR

Instead of averaging the clip-level C3D features, as we did in C3D-SVR, to get a video-level, in C3D-LSTM-SVR, we use LSTM to model the temporal evolution. A SVR is used on top of each of the LSTM's. We use the C3D-LSTM trained previously. Final scores were the product of the corresponding execution scores and difficulty scores. A correlation of 0.81 for execution score, correlation of 0.3 for difficulty and correlation of 0.67 for final scores were obtained by this framework. The results clearly show improvements over C3D-LSTM.

5. Conclusion

We present three frameworks for action quality assessment: C3D-SVR, C3D-LSTM and C3D-LSTM-SVR. The frameworks mainly differ in the way they aggregate clip-level C3D features to get a video-level description. This video-level description is expressive about the quality of the action. We found that C3D-SVR gave best results, but was not able to detect errors made in the course of performing an action. We improve the performance of C3D-LSTM by using a SVR on top of it. Although, the performance of C3D-LSTM-SVR is lower than C3D-SVR, it has an advantage of being able to spot the erroneous segments of an action.

Method	Correlation
Pose + DCT [5]	0.53
C3D-SVR	**0.78**
C3D-LSTM	0.27
C3D-LSTM-SVR	**0.67**

Table 4. Diving dataset. Comparison with existing approach. Feature vector was not augmented with difficulty score. With augmentation, our results were further better.

References

[1] S. Hochreiter and J. Schmidhuber. Long short-term memory. *Neural Comput.*, 9(8):1735–1780, Nov. 1997. 3

[2] Y. Jia, E. Shelhamer, J. Donahue, S. Karayev, J. Long, R. Girshick, S. Guadarrama, and T. Darrell. Caffe: Convolutional architecture for fast feature embedding. *arXiv preprint arXiv:1408.5093*, 2014. 7

[3] A. Karpathy, G. Toderici, S. Shetty, T. Leung, R. Sukthankar, and L. Fei-Fei. Large-scale video classification with convolutional neural networks. In *CVPR*, 2014. 1, 2

[4] H. Kuehne, H. Jhuang, E. Garrote, T. Poggio, and T. Serre. HMDB: a large video database for human motion recognition. In *Proceedings of the International Conference on Computer Vision (ICCV)*, 2011. 2

[5] P. Parmar and B. T. Morris. Measuring the quality of exercises. In *IEEE Inter. Conf. Engineering in Medicine and Biology Society*, pages 2241–2244, Orlando, Florida, Aug. 2016. 2, 3

[6] H. Pirsiavash, C. Vondrick, and A. Torralba. Assessing the quality of actions. In *Computer Vision - ECCV 2014 - 13th European Conference, Zurich, Switzerland, September 6-12, 2014, Proceedings, Part VI*, pages 556–571, 2014. 2, 6, 7

[7] K. Soomro, A. R. Zamir, and M. Shah. UCF101: A dataset of 101 human actions classes from videos in the wild. *CoRR*, abs/1212.0402, 2012. 2

[8] D. Tran, L. Bourdev, R. Fergus, L. Torresani, and M. Paluri. Learning spatiotemporal features with 3d convolutional networks. In *Proceedings of the 2015 IEEE International Conference on Computer Vision (ICCV)*, ICCV '15, pages 4489–4497, Washington, DC, USA, 2015. IEEE Computer Society. 2, 3

[9] G. Varol, I. Laptev, and C. Schmid. Long-term Temporal Convolutions for Action Recognition. *arXiv:1604.04494*, 2016. 2

[10] V. Venkataraman, I. Vlachos, and P. K. Turaga. Dynamical regularity for action analysis. In *Proceedings of the British Machine Vision Conference 2015, BMVC 2015, Swansea, UK, September 7-10, 2015*, pages 67.1–67.12, 2015. 2

[11] H. Wang, A. Klaser, C. Schmid, and C.-L. Liu. Action recognition by dense trajectories. In *Proceedings of the 2011 IEEE Conference on Computer Vision and Pattern Recognition*, CVPR '11, pages 3169–3176, Washington, DC, USA, 2011. IEEE Computer Society. 3

[12] K. Wnuk and S. Soatto. Analyzing diving: A dataset for judging action quality. In *Proceedings of the 2nd International Workshop on Video Event Categorization, Tagging and Retrieval (VECTaR2010), in conjunction with ACCV*, 2010. 2

[13] Y. Ye and Y. Tian. Embedding sequential information into spatiotemporal features for action recognition. In *The IEEE Conference on Computer Vision and Pattern Recognition (CVPR) Workshops*, June 2016. 3

[14] J. Yue-Hei Ng, M. Hausknecht, S. Vijayanarasimhan, O. Vinyals, R. Monga, and G. Toderici. Beyond short snippets: Deep networks for video classification. In *The IEEE Conference on Computer Vision and Pattern Recognition (CVPR)*, June 2015. 3

[15] A. Zia, Y. Sharma, V. Bettadapura, E. L. Sarin, M. A. Clements, and I. Essa. *Automated Assessment of Surgical Skills Using Frequency Analysis*, pages 430–438. Springer International Publishing, Cham, 2015. 2