arXiv:1504.03353v1 [math.DS] 13 Apr 2015

Global bifurcations of limit cycles in a Holling-type dynamical system ⋆

Valery A. Gaiko

National Academy of Sciences of Belarus,
United Institute of Informatics Problems, Minsk 220012, Belarus

Abstract

In this paper, we complete the global qualitative analysis of a quartic family of planar vector fields corresponding to a rational Holling-type dynamical system which models the dynamics of the populations of predators and their prey in a given ecological or biomedical system. In particular, studying global bifurcations, we prove that such a system can have at most two limit cycles surrounding one singular point.

Keywords: Holling-type dynamical system; field rotation parameter; bifurcation; singular point; limit cycle; Wintner–Perko termination principle

1 Introduction

In this paper, we consider a quartic family of planar vector fields corresponding to a rational Holling-type dynamical system which models the dynamics of the populations of predators and their prey in a given ecological or biomedical system and which is a variation on the classical Lotka–Volterra system. For the latter system the change of the prey density per unit of time per predator called the response function is proportional to the prey density. This means that there is no saturation of the predator when the amount of available prey is large. However, it is more realistic to consider a nonlinear and bounded

⋆ This work was partially supported by grants from the Simons Foundation (International Mathematical Union) and the Netherlands Organization for Scientific Research (NWO). The author is also very grateful to the Department of Mathematics and Statistics of the Missouri University of Science and Technology (USA) for hospitality and support during his stay in March – April 2015.
Email address: valery.gaiko@gmail.com (Valery A. Gaiko).

response function, and in fact different response functions have been used in the literature to model the predator response; see [2]–[4], [16]–[18], [20].

For instance, in [20], the following predator–prey model has been studied:

$$\begin{aligned} \dot{x} &= x(a - \lambda x) - yp(x) \qquad \text{(prey)}, \\ \dot{y} &= -\delta y + yq(x) \qquad \text{(predator)}. \end{aligned} \tag{1.1}$$

The variables $x > 0$ and $y > 0$ denote the density of the prey and predator populations respectively, while $p(x)$ is a non-monotonic response function given by

$$p(x) = \frac{mx}{\alpha x^2 + \beta x + 1}, \tag{1.2}$$

where α, m are positive and where $\beta > -2\sqrt{\alpha}$. Observe that in the absence of predators, the number of prey increases according to a logistic growth law. The coefficient a represents the intrinsic growth rate of the prey, while $\lambda > 0$ is the rate of competition or resource limitation of prey. The natural death rate of the predator is given by $\delta > 0$. In Gause's model the function $q(x)$ is given by $q(x) = cp(x)$, where $c > 0$ is the rate of conversion between prey and predator [20].

In [3], [4], the following family has been investigated:

$$\begin{aligned} \dot{x} &= x\left(1 - \lambda x - \frac{y}{\alpha x^2 + \beta x + 1}\right), \\ \dot{y} &= -y\left(\delta + \mu y - \frac{x}{\alpha x^2 + \beta x + 1}\right), \end{aligned} \tag{1.3}$$

where $\alpha \geq 0$, $\beta > -2\sqrt{\alpha}$, $\delta > 0$, $\lambda > 0$, and $\mu \geq 0$ are parameters. Note that (1.3) is obtained from (1.1) by adding the term $-\mu y^2$ to the second equation and after scaling x and y, as well as the parameters and the time t. In this way, it has been taken into account competition between predators for resources other than prey. The non-negative coefficient μ is the rate of competition amongst predators. Systems (1.1)–(1.3) represent predator–prey models with a generalized Holling response functions of type IV.

In [17], it has been considered the following generalized Gause predator–prey system

$$\begin{aligned} \dot{x} &= rx(1 - x/k) - yp(x), \\ \dot{y} &= y(-d + cp(x)) \end{aligned} \tag{1.4}$$

with a generalized Holling response function of type III:

$$p(x) = \frac{mx^2}{ax^2 + bx + 1}. \tag{1.5}$$

This system, where $x > 0$ and $y > 0$, has seven parameters: the parameters a, c, d, k, m, r are positive and the parameter b can be negative or non-negative. The parameters a, b, and m fitting parameters of response function. The parameter d is the death rate of the predator while c is the efficiency of the predator to convert prey into predators. The prey follows a logistic growth with a rate r in the absence of predator. The environment has a prey capacity determined by k.

The case $b \geq 0$ has been studied earlier; see the references in [17]. The case $b < 0$ is more interesting: it provides a model for a functional response with limited group defence. In opposition to the generalized Holling function of type IV studied in [3], [4], [20], where the response function tends to zero as the prey population tends to infinity, the generalized function of type III tends to a non-zero value as the prey population tends to infinity. The functional response of type III with $b < 0$ has a maximum at some point; see [17]. When studying the case $b < 0$, one can find also a Bogdanov–Takens bifurcation of codimension 3 which is an organizing center for the bifurcation diagram of system (1.10)–(1.5) [17].

After scaling x and y, as well as the parameters and the time t, this system can be reduced to a system with only four parameters (α, β, δ, ρ) [17]:

$$\begin{aligned} \dot{x} &= \rho x(1-x) - yp(x), \\ \dot{y} &= y(-\delta + p(x)), \end{aligned} \tag{1.6}$$

where

$$p(x) = \frac{x^2}{\alpha x^2 + \beta x + 1}. \tag{1.7}$$

Note that many studies of discrete-time predator–prey models have been done; see, e. g., [18] and the references therein. In particular, the following discrete predator–prey system with a generalized Holling response function of type III has been investigated in [18]:

$$\begin{aligned} x_{k+1} &= x_k + \theta x_k \left(\rho(1-x_k)(x_k - \lambda) - \frac{x_k y_k}{\alpha x_k^2 + \beta x_k + 1} \right), \\ y_{k+1} &= y_k + \theta y_k \left(-\delta + \frac{\gamma x_k^2}{\alpha x_k^2 + \beta x_k + 1} \right), \end{aligned} \tag{1.8}$$

where $\theta > 0$ is the step size in the forward Euler scheme.

In this paper, we study the system

$$\begin{aligned} \dot{x} &= x\left(1-\lambda x-\frac{xy}{\alpha x^2+\beta x+1}\right) \qquad \text{(prey)}, \\ \dot{y} &= -y\left(\delta+\mu y-\frac{x^2}{\alpha x^2+\beta x+1}\right) \qquad \text{(predator)}, \end{aligned} \tag{1.9}$$

where $x > 0$ and $y > 0$; $\alpha \geq 0$, $-\infty < \beta < +\infty$, $\delta > 0$, $\lambda > 0$, and $\mu \geq 0$ are parameters.

Rational system (1.9) can be written in the form of a quartic dynamical system

$$\begin{aligned} \dot{x} &= \quad x((1-\lambda x)(\alpha x^2+\beta x+1)-xy) \equiv P, \\ \dot{y} &= -y((\delta+\mu y)(\alpha x^2+\beta x+1)-x^2) \equiv Q. \end{aligned} \tag{1.10}$$

Together with (1.10), we will also consider an auxiliary system (see [1], [19])

$$\dot{x} = P-\gamma Q, \qquad \dot{y} = Q+\gamma P, \tag{1.11}$$

applying to these systems new bifurcation methods and geometric approaches developed in [4]–[15] and completing the qualitative analysis of (1.9).

2 Basic facts on singular points and limit cycles

The study of singular points of system (1.9) will use two index theorems by H. Poincaré; see [1]. But first let us define the singular point and its Poincaré index [1].

Definition 2.1. A singular point of the dynamical system

$$\dot{x} = P(x,y), \quad \dot{y} = Q(x,y), \tag{2.1}$$

where $P(x,y)$ and $Q(x,y)$ are continuous functions (for example, polynomials), is a point at which the right-hand sides of (2.1) simultaneously vanish.

Definition 2.2. Let S be a simple closed curve in the phase plane not passing through a singular point of system (2.1) and M be some point on S. If the point M goes around the curve S in positive direction (counterclockwise) one time, then the vector coinciding with the direction of a tangent to the trajectory passing through the point M is rotated through the angle $2\pi j$ ($j = 0, \pm 1, \pm 2, \ldots$). The integer j is called the *Poincaré index* of the closed

curve S relative to the vector field of system (2.1) and has the expression

$$j = \frac{1}{2\pi} \oint_S \frac{P\ dQ - Q\ dP}{P^2 + Q^2}.$$

According to this definition, the index of a node or a focus, or a center is equal to $+1$ and the index of a saddle is -1.

Theorem 2.1 (First Poincaré Index Theorem). *If N, N_f, N_c, and C are respectively the number of nodes, foci, centers, and saddles in a finite part of the phase plane and N' and C' are the number of nodes and saddles at infinity, then it is valid the formula*

$$N + N_f + N_c + N' = C + C' + 1.$$

Theorem 2.2 (Second Poincaré Index Theorem). *If all singular points are simple, then along an isocline without multiple points lying in a Poincaré hemisphere which is obtained by a stereographic projection of the phase plane, the singular points are distributed so that a saddle is followed by a node or a focus, or a center and vice versa. If two points are separated by the equator of the Poincaré sphere, then a saddle will be followed by a saddle again and a node or a focus, or a center will be followed by a node or a focus, or a center.*

Consider polynomial system (2.1) in the vector form

$$\dot{\boldsymbol{x}} = \boldsymbol{f}(\boldsymbol{x}, \boldsymbol{\mu}), \tag{2.2}$$

where $\boldsymbol{x} \in \mathbf{R}^2$; $\boldsymbol{\mu} \in \mathbf{R}^n$; $\boldsymbol{f} \in \mathbf{R}^2$ ($\boldsymbol{f}$ is a polynomial vector function).

Let us recall some basic facts concerning limit cycles of (2.2). But first of all, let us state two fundamental theorems from theory of analytic functions [5].

Theorem 2.3 (Weierstrass Preparation Theorem). *Let $F(w, z)$ be an analytic in the neighborhood of the point $(0, 0)$ function satisfying the following conditions*

$$F(0,0) = 0,\ \frac{\partial F(0,0)}{\partial w} = 0,\ \ldots,\ \frac{\partial^{k-1} F(0,0)}{\partial^{k-1} w} = 0; \quad \frac{\partial^k F(0,0)}{\partial^k w} \neq 0.$$

Then in some neighborhood $|w| < \varepsilon$, $|z| < \delta$ of the points $(0, 0)$ the function $F(w, z)$ can be represented as

$$F(w,z) = (w^k + A_1(z) w^{k-1} + \ldots + A_{k-1}(z) w + A_k(z)) \Phi(w,z),$$

where $\Phi(w,z)$ is an analytic function not equal to zero in the chosen neighborhood and $A_1(z),\ldots,A_k(z)$ are analytic functions for $|z|<\delta$.

From this theorem it follows that the equation $F(w,z)=0$ in a sufficiently small neighborhood of the point $(0,0)$ is equivalent to the equation

$$w^k + A_1(z)w^{k-1} + \ldots + A_{k-1}(z)w + A_k(z) = 0,$$

which left-hand side is a polynomial with respect to w. Thus, the Weierstrass preparation theorem reduces the local study of the general case of implicit function $w(z)$, defined by the equation $F(w,z)=0$, to the case of implicit function, defined by the algebraic equation with respect to w.

Theorem 2.4 (Implicit Function Theorem). *Let $F(w,z)$ be an analytic function in the neighborhood of the point $(0,0)$ and $F(0,0)=0$, $F'_w(0,0)\neq 0$.*

Then there exist $\delta>0$ and $\varepsilon>0$ such that for any z satisfying the condition $|z|<\delta$ the equation $F(w,z)=0$ has the only solution $w=f(z)$ satisfying the condition $|f(z)|<\varepsilon$. The function $f(z)$ is expanded into the series on positive integer powers of z which converges for $|z|<\delta$, i. e., it is a single-valued analytic function of z which vanishes at $z=0$.

Assume that system (2.2) has a limit cycle

$$L_0 : \boldsymbol{x} = \boldsymbol{\varphi}_0(t)$$

of minimal period T_0 at some parameter value $\boldsymbol{\mu}=\boldsymbol{\mu}_0\in\mathbf{R}^n$ (Fig. 1).

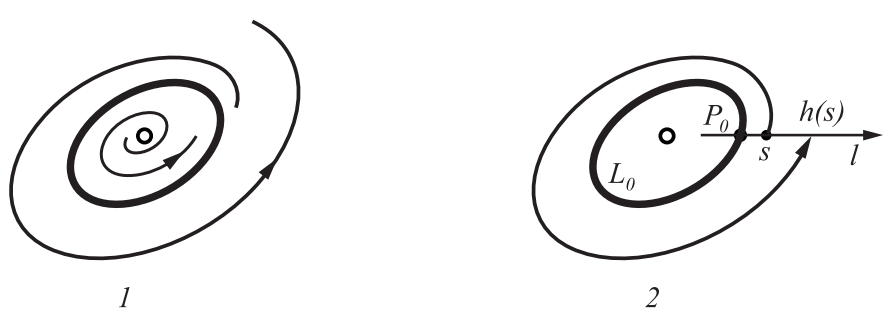

FIG. 1. The Poincaré return map in the neighborhood of a multiple limit cycle.

Let l be the straight line normal to L_0 at the point $\boldsymbol{p}_0=\boldsymbol{\varphi}_0(0)$ and s be the coordinate along l with s positive exterior of L_0. It then follows from the implicit function theorem that there is a $\delta>0$ such that the Poincaré map $h(s,\boldsymbol{\mu})$ is defined and analytic for $|s|<\delta$ and $\|\boldsymbol{\mu}-\boldsymbol{\mu}_0\|<\delta$. Besides, the displacement function for system (2.2) along the normal line l to L_0 is defined as the function

$$d(s,\boldsymbol{\mu}) = h(s,\boldsymbol{\mu}) - s.$$

In terms of the displacement function, a multiple limit cycle can be defined as follows [5].

Definition 2.3. A limit cycle L_0 of (2.2) is a *multiple limit cycle* iff $d(0,\boldsymbol{\mu}_0) = d_r(0,\boldsymbol{\mu}_0) = 0$ and it is a *simple limit cycle* (or hyperbolic limit cycle) if it is not a multiple limit cycle; furthermore, L_0 is a limit cycle of multiplicity m iff

$$d(0,\boldsymbol{\mu}_0) = d_r(0,\boldsymbol{\mu}_0) = \ldots = d_r^{(m-1)}(0,\boldsymbol{\mu}_0) = 0, \quad d_r^{(m)}(0,\boldsymbol{\mu}_0) \neq 0.$$

Note that the multiplicity of L_0 is independent of the point $\boldsymbol{p}_0 \in L_0$ through which we take the normal line l.

Let us write down also the following formulas which have already become classical ones and determine the derivatives of the displacement function in terms of integrals of the vector field $\boldsymbol{f}$ along the periodic orbit $\boldsymbol{\varphi}_0(t)$ [5]:

$$d_s(0,\boldsymbol{\mu}_0) \;=\; \exp\int_0^{T_0} \boldsymbol{\nabla}\cdot\boldsymbol{f}(\boldsymbol{\varphi}_0(t),\boldsymbol{\mu}_0)\,\mathrm{d}t - 1 \tag{3.2}$$

and

$$d_{\mu_j}(0,\boldsymbol{\mu}_0) = \frac{-\omega_0}{\|\boldsymbol{f}(\boldsymbol{\varphi}_0(0),\boldsymbol{\mu}_0)\|}\int_0^{T_0}\exp\left(-\int_0^t \boldsymbol{\nabla}\cdot\boldsymbol{f}(\boldsymbol{\varphi}_0(\tau),\boldsymbol{\mu}_0)\,\mathrm{d}\tau\right)\boldsymbol{f}\wedge\boldsymbol{f}_{\mu_j}(\boldsymbol{\varphi}_0(t),\boldsymbol{\mu}_0)\,\mathrm{d}t \tag{3.3}$$

for $j = 1,\ldots,n$, where $\omega_0 = \pm 1$ according to whether L_0 is positively or negatively oriented, respectively, and where the wedge product of two vectors $\boldsymbol{x} = (x_1, x_2)$ and $\boldsymbol{y} = (y_1, y_2)$ in $\mathbf{R}^2$ is defined as

$$\boldsymbol{x}\wedge\boldsymbol{y} = x_1\,y_2 - x_2\,y_1.$$

Similar formulas for $d_{ss}(0,\boldsymbol{\mu}_0)$ and $d_{s\mu_j}(0,\boldsymbol{\mu}_0)$ can be derived in terms of integrals of the vector field $\boldsymbol{f}$ and its first and second partial derivatives along $\boldsymbol{\varphi}_0(t)$. The hypotheses of theorems in the next section will be stated in terms of conditions on the displacement function $d(s,\boldsymbol{\mu})$ and its partial derivatives at $(0,\boldsymbol{\mu}_0)$ [5].

3 Local bifurcation surfaces and the global termination principle for multiple limit cycles

In this section, we restate first Perko's theorems on the local existence of $(n-m+1)$-dimensional surfaces, C_m, of multiplicity-m limit cycles for the

polynomial system (2.2) with $\boldsymbol{\mu} \in \mathbf{R}^n$ and $n \geq m \geq 2$. These results describe the topological structure of the codimension $(m-1)$ bifurcation surfaces C_m. For $m = 2, 3, 4$, C_2, C_3, and C_4 are the familiar fold, cusp, and swallow-tail bifurcation surfaces; for $m \geq 5$, the topological structure of the surfaces C_m is more complex. For instance, C_5 and C_6 are the butterfly and wigwam bifurcation surfaces, respectively [19]. Since the proofs of the theorems in this section, describing the universal unfolding near a multiple limit cycles of (2.2), parallel the classical proofs of Catastrophe Theory, we will only state the theorems (see [19] for more detail).

Definition 3.1. An $(n-1)$-dimensional analytic surface $C_2 \subset \mathbf{R}^n$ is an $(n-1)$-*dimensional fold bifurcation surface of multiplicity-two limit cycles of (2.2) through a point* $\boldsymbol{\mu}_0 \in \boldsymbol{R}^n$, if for all $\varepsilon > 0$ there exists a $\delta > 0$ such that for each $\boldsymbol{\mu} \in C_2$ with $\|\boldsymbol{\mu} - \boldsymbol{\mu}_0\| < \delta$, the system (2.2) has a unique multiplicity-two limit cycle $L_{\boldsymbol{\mu}}$ in an ε-neighborhood of L_0 and the system (2.2) undergoes a fold bifurcation at $L_{\boldsymbol{\mu}}$; i. e., for $\|\boldsymbol{\mu} - \boldsymbol{\mu}_0\| < \delta$, $L_{\boldsymbol{\mu}}$ splits into a simple stable and a simple unstable limit cycles in an ε-neighborhood of L_0 for $\boldsymbol{\mu}$ on one side of C_2 and $L_{\boldsymbol{\mu}}$ vanishes for $\boldsymbol{\mu}$ on the other side of C_2. Cf. Fig. 2.

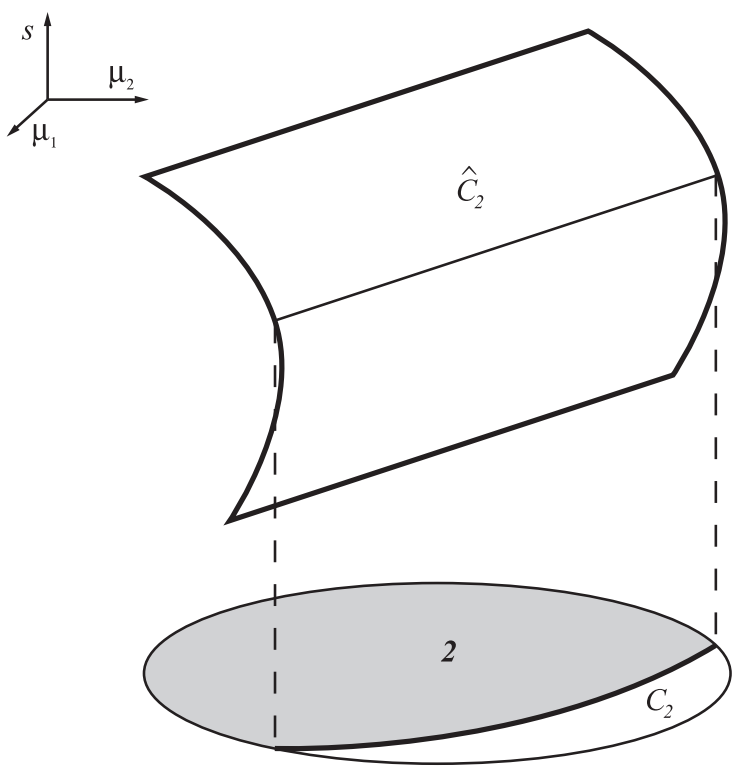

FIG. 2. The fold bifurcation surface.

Theorem 3.1. *Suppose that* $n \geq 2$, *that for* $\boldsymbol{\mu} = \boldsymbol{\mu}_0 \in \boldsymbol{R}^n$ *system (2.2) has a multiplicity-two limit cycle* L_0, *and that* $d_{\mu_1}(0, \boldsymbol{\mu}_0) \neq 0$. *Then given* $\varepsilon > 0$, *there is a* $\delta > 0$ *and a unique function* $g(\mu_2, \ldots, \mu_n)$ *with* $g(\mu_2^{(0)}, \ldots, \mu_n^{(0)}) =$

$\mu_1^{(0)}$, *defined and analytic for* $|\mu_2 - \mu_2^{(0)}| < \delta, \ldots, |\mu_n - \mu_n^{(0)}| < \delta$, *such that for* $|\mu_2 - \mu_2^{(0)}| < \delta, \ldots, |\mu_n - \mu_n^{(0)}| < \delta$,

$$C_2 : \quad \mu_1 = g(\mu_2, \ldots, \mu_n)$$

is an $(n-1)$*-dimensional, analytic fold bifurcation surface of multiplicity-two limit cycles of (2.2) through the point* $\boldsymbol{\mu}_0$.

Definition 3.2. An analytic surface $C_3 \subset \mathbf{R}^n$ is an $(n-2)$*-dimensional cusp bifurcation surface of multiplicity-three limit cycles of (2.2) through a point* $\boldsymbol{\mu}_0 \in \boldsymbol{R}^n$, if for all $\varepsilon > 0$ there exists a $\delta > 0$ such that for each $\boldsymbol{\mu} \in C_3$ with $\|\boldsymbol{\mu} - \boldsymbol{\mu}_0\| < \delta$, system (2.2) has a unique multiplicity-three limit cycle $L_{\boldsymbol{\mu}}$ in an ε-neighborhood of L_0 and the system (2.2) undergoes a cusp bifurcation at $L_{\boldsymbol{\mu}}$; i. e., C_3 is the intersection of two $(n-1)$-dimensional fold bifurcation surfaces of multiplicity-two limit cycles of (2.2), $C_2^{\pm}$, which intersect in a cusp along C_3; for $\|\boldsymbol{\mu} - \boldsymbol{\mu}_0\| < \delta$ and for $\boldsymbol{\mu}$ in the cuspidal region between C_2^+ and C_2^- (shaded in Fig. 3), system (2.2) has three simple limit cycles in an ε-neighborhood of L_0; for $\|\boldsymbol{\mu} - \boldsymbol{\mu}_0\| < \delta$ and $\boldsymbol{\mu}$ outside the cuspidal region, system (2.2) has one simple limit cycle in an ε-neighborhood of L_0. Cf. Fig. 3.

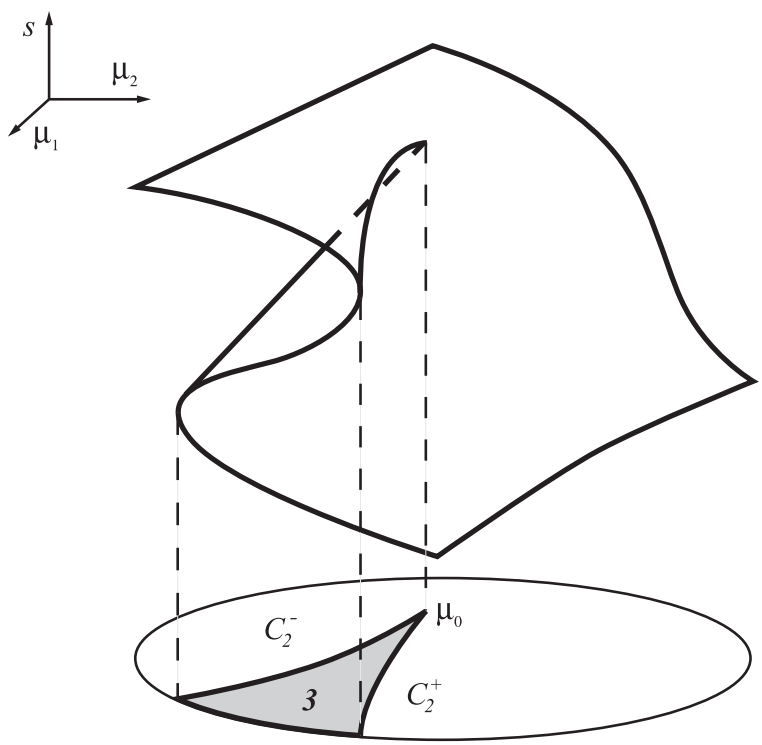

FIG. 3. The cusp bifurcation surface.

Theorem 3.2. *Suppose that* $n \geq 3$, *that for* $\boldsymbol{\mu} = \boldsymbol{\mu}_0 \in \boldsymbol{R}^n$ *system (2.2) has a multiplicity-three limit cycle* L_0, *that* $d_{\mu_1}(0, \boldsymbol{\mu}_0) \neq 0$, $d_{r\mu_1}(0, \boldsymbol{\mu}_0) \neq 0$ *and for*

$j = 2, \ldots, n$,

$$\Delta_j \equiv \frac{\partial(d, d_r)}{\partial(\mu_1, \mu_j)}(0, \boldsymbol{\mu}_0) \neq 0.$$

Then given $\varepsilon > 0$, there is a $\delta > 0$ and constants $\omega_j = \pm 1$ for $j = 2, \ldots, n$, and there exist unique functions $h_1(\mu_2, \ldots, \mu_n)$, $h_2(\mu_2, \ldots, \mu_n)$ and $g^{\pm}(\mu_2, \ldots, \mu_n)$ with $h_1(\mu_2^{(0)}, \ldots, \mu_n^{(0)}) = \mu_1^{(0)}$, $h_2(\mu_2^{(0)}, \ldots, \mu_n^{(0)}) = \mu_1^{(0)}$ and $g^{\pm}(\mu_2^{(0)}, \ldots, \mu_n^{(0)}) = \mu_1^{(0)}$, where h_1 and h_2 are defined and analytic for $|\mu_j - \mu_j^{(0)}| < \delta$, $j = 2, \ldots, n$, and $g^{\pm}$ are defined and continuous for $0 \leq \sigma_j(\mu_j - \mu_j^{(0)}) < \delta$ and analytic for $0 < \omega_j(\mu_j - \mu_j^{(0)}) < \delta$, $j = 2, \ldots, n$ such that

$$C_3 : \quad \begin{cases} \mu_1 = h_1(\mu_2, \ldots, \mu_n) \\ \mu_1 = h_2(\mu_2, \ldots, \mu_n) \end{cases}$$

is an $(n-2)$-dimensional, analytic, cusp bifurcation surface of multiplicity-three limit cycles of (2.2) through the point $\boldsymbol{\mu}_0$ and

$$C_2^{\pm} : \quad \mu_1 = g^{\pm}(\mu_2, \ldots, \mu_n)$$

are two $(n-1)$-dimensional, analytic, fold bifurcation surfaces of multiplicity-two limit cycles of (2.2) which intersect in a cusp along C_3.

Definition 3.3. An analytic surface $C_4 \subset \mathbf{R}^n$ is an $(n-3)$-*dimensional swallow-tail bifurcation surface of multiplicity-four limit cycles of (2.2) through a point* $\boldsymbol{\mu}_0 \in \boldsymbol{R}^n$, if for all $\varepsilon > 0$ there exists a $\delta > 0$ such that for each $\boldsymbol{\mu} \in C_4$ with $\|\boldsymbol{\mu} - \boldsymbol{\mu}_0\| < \delta$, system (2.2) has a unique multiplicity-four limit cycle $L_{\boldsymbol{\mu}}$ in an ε-neighborhood of L_0 and system (2.2) undergoes a swallow-tail bifurcation at $L_{\boldsymbol{\mu}}$; i. e., C_4 is the intersection of two $(n-2)$-dimensional cusp bifurcation surfaces of multiplicity-three limit cycles $C_3^{\pm}$ which intersect in a cusp along C_4; furthermore, there are three $(n-1)$-dimensional fold bifurcation surfaces of multiplicity-two limit cycles of (2.2), $C_2^{(i)}$, $i = 0, 1, 2$, such that $C_2^{(0)}$ and $C_2^{(1)}$ intersect in a cusp along C_3^{+}, $C_2^{(0)}$ and $C_2^{(2)}$ intersect in a cusp along C_3^{-}, and $C_2^{(1)}$ and $C_2^{(2)}$ intersect along an $(n-2)$-dimensional surface on which (2.2) has two multiplicity-two limit cycles; finally, for $\|\boldsymbol{\mu} - \boldsymbol{\mu}_0\| < \delta$ and for $\boldsymbol{\mu}$ in the swallow-tail region (shaded in Fig. 4), system (2.2) has four simple limit cycles in an ε-neighborhood of L_0; for $\|\boldsymbol{\mu} - \boldsymbol{\mu}_0\| < \delta$ and $\boldsymbol{\mu}$ above the surfaces $C_2^{(i)}$, $i = 0, 1, 2$, system (2.2) has two simple limit cycles in an ε-neighborhood of L_0; for $\|\boldsymbol{\mu} - \boldsymbol{\mu}_0\| < \delta$ and $\boldsymbol{\mu}$ below the surfaces $C_2^{(i)}$, $i = 0, 1, 2$, system (2.2) has no limit cycles in an ε-neighborhood of L_0. Cf. Fig. 4.

Theorem 3.3. *Suppose that $n \geq 4$, that for $\boldsymbol{\mu} = \boldsymbol{\mu}_0 \in \boldsymbol{R}^n$ system (2.2) has a multiplicity-four limit cycle L_0, that $d_{\mu_1}(0, \boldsymbol{\mu}_0) \neq 0$, $d_{r\mu_1}(0, \boldsymbol{\mu}_0) \neq 0$,*

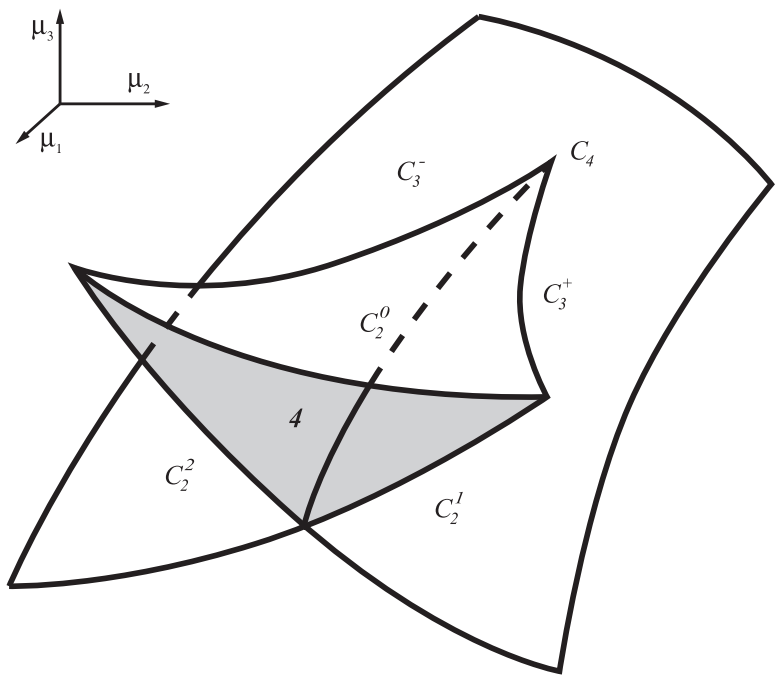

FIG. 4. The swallow-tail bifurcation surface.

$d_{rr\mu_1}(0, \boldsymbol{\mu}_0) \neq 0$, *and that for* $j = 2, \ldots, n$,

$$\frac{\partial(d, d_r)}{\partial(\mu_1, \mu_j)}(0, \boldsymbol{\mu}_0) \neq 0, \quad \frac{\partial(d, d_{rr})}{\partial(\mu_1, \mu_j)}(0, \boldsymbol{\mu}_0) \neq 0, \quad \frac{\partial(d_r, d_{rr})}{\partial(\mu_1, \mu_j)}(0, \boldsymbol{\mu}_0) \neq 0.$$

Then given $\varepsilon > 0$, *there is a* $\delta > 0$ *and constants* $\omega_{jk} = \pm 1$ *for* $j = 2, \ldots, n$, $k = 1, 2$, *and there exist unique functions* $g_i(\mu_2, \ldots, \mu_n)$, $h_k^{\pm}(\mu_2, \ldots, \mu_n)$ *and* $F_i(\mu_2, \ldots, \mu_n)$, *with* $g_i(\mu_2^{(0)}, \ldots, \mu_n^{(0)}) = h_k^{\pm}(\mu_2^{(0)}, \ldots, \mu_n^{(0)}) = F_i(\mu_2^{(0)}, \ldots, \mu_n^{(0)}) = \mu_1^{(0)}$, *for* $i = 0, 1, 2$ *and* $k = 1, 2$, *where* F_i *is defined and analytic for* $i = 0, 1, 2$, *and* $|\mu_j - \mu_j^{(0)}| < \delta$, $j = 2, \ldots, n$, $h_k^{\pm}$ *are defined and continuous for* $0 \leq \omega_{jk}(\mu_j - \mu_j^{(0)}) < \delta$ *and analytic for* $0 < \omega_{jk}(\mu_j - \mu_j^{(0)}) < \delta$, $j = 2, \ldots, n$, $k = 1, 2$, *and for* $i = 0, 1, 2$, g_i *is defined and analytic in the cuspidal region between the surfaces* $\mu_1 = h_2^{\pm}(\mu_2, \ldots, \mu_n)$, *which intersect in a cusp, and* g_i *is continuous in the closure of that region, such that*

$$C_4 : \quad \begin{cases} \mu_1 = F_0(\mu_2, \ldots, \mu_n) \\ \mu_1 = F_1(\mu_2, \ldots, \mu_n) \\ \mu_1 = F_2(\mu_2, \ldots, \mu_n) \end{cases}$$

is an $(n-3)$*-dimensional, analytic, swallow-tail bifurcation surface of multiplicity-four limit cycles of (2.2) through the point* $\boldsymbol{\mu}_0$ *which is the intersection of two* $(n-2)$*-dimensional, analytic, cusp bifurcation surfaces of multiplicity-*

three limit cycles of (2.2),

$$C_3^{\pm}: \quad \begin{cases} \mu_1 = h_1^{\pm}(\mu_2, \ldots, \mu_n) \\ \mu_1 = h_2^{\pm}(\mu_2, \ldots, \mu_n) \end{cases}$$

which intersect in a cusp along C_4; *furthermore,* $C_3^+ = C_2^{(0)} \bigcap C_2^{(1)}$ *and* $C_3^- = C_2^{(0)} \bigcap C_2^{(2)}$ *where for* $i = 0, 1, 2,$

$$C_2^i: \quad \mu_1 = g_i(\mu_2, \ldots, \mu_n)$$

are $(n-1)$*-dimensional, analytic, fold bifurcation surfaces of multiplicity-two limit cycles of (2.2) which intersect in cusps along* $C_3^{\pm}$ *and in an* $(n-2)$*-dimensional, analytic surface* $C_2^{(1)} \bigcap C_2^{(2)}$ *on which (2.2) has two multiplicity-two limit cycles* (Fig. 4 and Fig. 5).

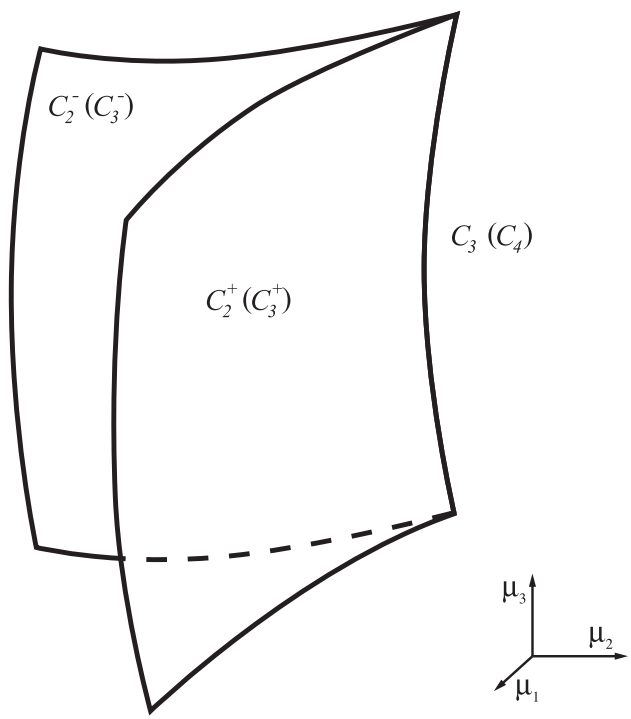

FIG. 5. The bifurcation curve (one-parameter family) of multiple limit cycles.

Based on Theorems 2.3, 2.4, the following generalization of Theorems 3.1 – 3.3 can be proved on induction [19].

Theorem 3.4. *Given* $m \geq 2$. *Suppose that* $n \geq m$, *that for* $\boldsymbol{\mu} = \boldsymbol{\mu}_0 \in \boldsymbol{R}^n$ *polynomial system (2.2) has a multiplicity-m limit cycle* L_0, *that*

$$\frac{\partial d}{\partial \mu_1}(0, \boldsymbol{\mu}_0) \neq 0, \quad \frac{\partial d_r}{\partial \mu_1}(0, \boldsymbol{\mu}_0) \neq 0, \ \ldots, \quad \frac{\partial d_r^{(m-2)}}{\partial \mu_1}(0, \boldsymbol{\mu}_0) \neq 0,$$

and that

$$\frac{\partial(d_r^{(i)}, d_r^{(j)})}{\partial(\mu_1, \mu_k)}\,(0, \boldsymbol{\mu}_0) \neq 0$$

for $i, j = 0, \ldots, m-2$ *with* $i \neq j$ *and* $k = 2, \ldots, n$.

Then given $\varepsilon > 0$ *there is a* $\delta > 0$ *such that for* $\|\boldsymbol{\mu} - \boldsymbol{\mu}_0\| < \delta$, *the system (2.2) has*

(1) *a unique* $(n-m+1)$*-dimensional analytic surface* C_m *of multiplicity-*m *limit cycles of (2.2) through the point* $\boldsymbol{\mu}_0$;

(2) *two* $(n-m+2)$*-dimensional analytic surfaces* C_{m-1} *of multiplicity-*$(m-1)$ *limit cycles of (2.2) through the point* $\boldsymbol{\mu}_0$ *which intersect in a cusp along* C_m;

...

(j) *exactly* j, $(n-m+j)$*-dimensional analytic surfaces* C_{m-j+1} *of multiplicity-*$(m-j+1)$ *limit cycles of (2.2) through the point* $\boldsymbol{\mu}_0$ *which intersect pairwise in cusps along the bifurcation surfaces* C_{m-j+2};

...

$(m-1)$ *exactly* $(m-1)$, $(n-1)$*-dimensional analytic fold bifurcation surfaces* C_2 *of multiplicity-two limit cycles of (2.2) through the point* $\boldsymbol{\mu}_0$ *which intersect pairwise in a cusp along the* $(n-2)$*-dimensional cusp bifurcation surfaces* C_3.

Let us formulate now the Wintner–Perko termination principle [19] for polynomial system (2.2).

Theorem 3.5 (Wintner–Perko termination principle). *Any one-parameter family of multiplicity-m limit cycles of relatively prime polynomial system (2.2) can be extended in a unique way to a maximal one-parameter family of multiplicity-m limit cycles of (2.2) which is either open or cyclic.*

If it is open, then it terminates either as the parameter or the limit cycles become unbounded; or, the family terminates either at a singular point of (2.2), which is typically a fine focus of multiplicity m, *or on a (compound) separatrix cycle of (2.2) which is also typically of multiplicity* m.

The proof of this principle for general polynomial system (2.2) with a vector parameter $\boldsymbol{\mu} \in \mathbf{R}^n$ parallels the proof of the planar termination principle for the system

$$\dot{x} = P(x, y, \lambda), \quad \dot{y} = Q(x, y, \lambda) \tag{3.1}$$

with a single parameter $\lambda \in \mathbf{R}$ (see [5], [19]), since there is no loss of generality in assuming that system (2.2) is parameterized by a single parameter λ; i. e., we can assume that there exists an analytic mapping $\boldsymbol{\mu}(\lambda)$ of $\mathbf{R}$ into $\mathbf{R}^n$ such

that (2.2) can be written as (3.1) and then we can repeat everything, what had been done for system (3.1) in [19]. In particular, if λ is a field rotation parameter of (3.1), the following Perko's theorem on monotonic families of limit cycles is valid; see [19].

Theorem 3.6. *If L_0 is a nonsingular multiple limit cycle of (3.1) for $\lambda = \lambda_0$, then L_0 belongs to a one-parameter family of limit cycles of (3.1); furthermore:*

1) *if the multiplicity of L_0 is odd, then the family either expands or contracts monotonically as λ increases through λ_0;*

2) *if the multiplicity of L_0 is even, then L_0 bifurcates into a stable and an unstable limit cycle as λ varies from λ_0 in one sense and L_0 disappears as λ varies from λ_0 in the opposite sense; i. e., there is a fold bifurcation at λ_0.*

4 Global bifurcation analysis

Consider system (1.10). This system has two invariant straight lines: $x = 0$ and $y = 0$. Its finite singularities are determined by the algebraic system

$$\begin{aligned} &x((1-\lambda x)(\alpha x^2+\beta x+1)-xy)=0,\\ &y((\delta+\mu y)(\alpha x^2+\beta x+1)-x^2)=0. \end{aligned} \tag{4.1}$$

From (4.1), we have got: two singular points $(0,0)$ and $(0,-\delta/\mu)$, at most two points defined by the condition

$$\alpha x^2+\beta x+1=0, \quad y=0, \tag{4.2}$$

and at most six singularities defined by the system

$$\begin{aligned} &xy=(1-\lambda x)(\alpha x^2+\beta x+1),\\ &y\,(\delta+\mu y)=x\,(1-\lambda x), \end{aligned} \tag{4.3}$$

among which we always have the point $(1/\lambda, 0)$.

The point $(0,0)$ is always a saddle, but $(1/\lambda, 0)$ can be a node or a saddle, or a saddle-node. The point $(1/\lambda, 0)$ can change multiplicity when singular points enter or exit the first quadrant. In addition, a singular point of multiplicity 2 may appear in the first quadrant and bifurcate into two singular points. In the case $\beta \geq 0$ (respectively, $\beta < 0$), there is a possibility of up to one singular point (respectively, two singular points) in the open first quadrant [17]. If there

exists exactly one simple singular point in the open first quadrant, then it is an anti-saddle. If there exists exactly two simple singular points in the open first quadrant, then the singular point on the left with respect to the x-axis is an anti-saddle and the singular point on the right is a saddle [17]. If a singular point is not in the first quadrant, in consequence, it has no biological significance.

To study singular points of (1.10) at infinity, consider the corresponding differential equation

$$\frac{dy}{dx} = -\frac{y((\delta + \mu y)(\alpha x^2 + \beta x + 1) - x^2)}{x((1 - \lambda x)(\alpha x^2 + \beta x + 1) - xy)}. \tag{4.4}$$

Dividing the numerator and denominator of the right-hand side of (4.4) by x^4 ($x \neq 0$) and denoting y/x by u (as well as dy/dx), we will get the algebraic equation

$$u((\mu/\lambda)u - 1) = 0, \quad \text{where} \quad u = y/x, \tag{4.5}$$

for all infinite singularities of (4.4) except when $x = 0$ (the "ends" of the y-axis), see [1], [5]. For this special case we can divide the numerator and denominator of the right-hand side of (4.4) by y^4 ($y \neq 0$) denoting x/y by v (as well as dx/dy) and consider the algebraic equation

$$v^3(v - \mu/\lambda) = 0, \quad \text{where} \quad v = x/y. \tag{4.6}$$

The equations (4.5) and (4.6) give three singular points at infinity for (4.4): a simple node on the "ends" of the x-axis, a triple node on the "ends" of the y-axis, and a simple saddle in the direction of $y/x = \lambda/\mu$.

To investigate the character and distribution of the singular points in the phase plane, we have used a method developed in [4]–[15]. The sense of this method is to obtain the simplest (well-known) system by vanishing some parameters(usually field rotation parameters) of the original system and then to input these parameters successively one by one studying the dynamics of the singular points (both finite and infinite) in the phase plane.

Using the obtained information on singular points and applying a geometric approach developed in [4]–[15], we can study the limit cycle bifurcations of system (1.10). This study will use some results obtained in [17]: in particular, the results on the cyclicity of a singular point of (1.10). However, it is surely not enough to have only these results to prove the main theorem of this paper concerning the maximum number of limit cycles of system (1.10).

Applying the definition of a field rotation parameter [1], [5], [19], i. e., a parameter which rotates the field in one direction, to system (1.10), let us calculate

the corresponding determinants for the parameters α and β, respectively:

$$\Delta_\alpha = PQ'_\alpha - QP'_\alpha = x^4 y(y(\delta + \mu y) - x(1 - \lambda x)), \tag{4.7}$$

$$\Delta_\beta = PQ'_\beta - QP'_\beta = x^4 y(y(\delta + \mu y) - x(1 - \lambda x)). \tag{4.8}$$

It follows from (4.7) and (4.8) that on increasing α or β the vector field of (1.10) in the first quadrant is rotated in positive direction (counterclockwise) only on the outside of the ellipse

$$y(\delta + \mu y) - x(1 - \lambda x) = 0. \tag{4.9}$$

Therefore, to study limit cycle bifurcations of system (1.10), it makes sense together with (1.10) to consider also an auxiliary system (1.11) with a field rotation parameter γ:

$$\Delta_\gamma = P^2 + Q^2 \geq 0. \tag{4.10}$$

Using system (1.11) and applying Perko's results, we will prove the following theorem.

Theorem 4.1. *System (1.10) can have at most two limit cycles surrounding one singular point.*

Proof. First let us prove that system (1.10) can have at least two limit cycles. Begin with system (1.10), where $\alpha = \beta = 0$. It is clear that such a cubic system, with two invariant straight lines, cannot have limit cycles at all [17]. Inputting a negative parameter β into this system, the vector field of (1.10) will be rotated in negative direction (clockwise) at infinity, the structure and the character of stability of infinite singularities will be changed, and an unstable limit, Γ_1, will appear immediately from infinity in this case. This cycle will surround a stable anti-saddle (a node or a focus) A which is in the first quadrant of system (1.10). Inputting a positive parameter α, the vector field of quartic system (1.10) will be rotated in positive direction (counterclockwise) at infinity, the structure and the character of stability of infinite singularities will be changed again, and a stable limit, Γ_2, surrounding Γ_1 will appear immediately from infinity in this case. On further increasing the parameter α, the limit cycles Γ_1 and Γ_2 combine a semi-stable limit, Γ_{12}, which then disappears in a "trajectory concentration" [1], [5]. Thus, we have proved that system (1.10) can have at least two limit cycles; see also [17].

Let us prove now that this system has at most two limit cycles. The proof is carried out by contradiction applying Catastrophe Theory; see [5], [19]. Consider system (1.5) with three parameters: α, β, and γ (the parameters δ, λ, and μ can be fixed, since they do not generate limit cycles). Suppose that (1.5) has three limit cycles surrounding the only point A in the first quadrant.

Then we get into some domain of the parameters α, β, and γ being restricted by definite conditions on three other parameters δ, λ, and μ. This domain is bounded by two fold bifurcation surfaces forming a cusp bifurcation surface of multiplicity-three limit cycles in the space of the parameters α, β, and γ [5], [19].

The corresponding maximal one-parameter family of multiplicity-three limit cycles cannot be cyclic, otherwise there will be at least one point corresponding to the limit cycle of multiplicity four (or even higher) in the parameter space. Extending the bifurcation curve of multiplicity-four limit cycles through this point and parameterizing the corresponding maximal one-parameter family of multiplicity-four limit cycles by the field rotation parameter γ, according to Theorem 3.6, we will obtain two monotonic curves of multiplicity-three and one, respectively, which, by the Wintner–Perko termination principle (Theorem 3.5), terminate either at the point A or on a separatrix cycle surrounding this point. Since we know at least the cyclicity of the singular point which is equal to two (see [17]), we have got a contradiction with the termination principle stating that the multiplicity of limit cycles cannot be higher than the multiplicity (cyclicity) of the singular point in which they terminate.

If the maximal one-parameter family of multiplicity-three limit cycles is not cyclic, using the same principle (Theorem 4.5), this again contradicts the cyclicity of A (see [17]) not admitting the multiplicity of limit cycles to be higher than two. This contradiction completes the proof in the case of one singular point in the first quadrant.

Suppose that system (1.10) with two finite singularities, a saddle S and an anti-saddle A, has three limit cycles surrounding A. Then we get again into some domain of the parameters α, β, and γ bounded by two fold bifurcation surfaces forming a cusp bifurcation surface of multiplicity-three limit cycles in the space of the parameters α, β, and γ being restricted by definite conditions on three other parameters δ, λ, and μ [5], [19].

The corresponding maximal one-parameter family of multiplicity-three limit cycles cannot be cyclic, otherwise there will be at least one point corresponding to the limit cycle of multiplicity four (or even higher) in the parameter space. Extending the bifurcation curve of multiplicity-four limit cycles through this point and parameterizing the corresponding maximal one-parameter family of multiplicity-four limit cycles by the field rotation parameter γ, according to Theorem 3.6, we will obtain again two monotonic curves of multiplicity-three and one, respectively, which, by Theorem 3.5, terminate either at the point A or on a separatrix loop surrounding this point. Since we know at least the cyclicity of the singular point which is equal to two (see [17]), we have got a contradiction with the termination principle (Theorem 3.5).

If the maximal one-parameter family of multiplicity-three limit cycles is not cyclic, using the same principle, this again contradicts the cyclicity of A (see [17]) not admitting the multiplicity of limit cycles higher than two. Moreover, it also follows from the termination principle that a separatrix loop cannot have the multiplicity (cyclicity) higher than two in this case.

Thus, we conclude that system (1.10) cannot have either a multiplicity-three limit cycle or more than two limit cycles surrounding a singular point which proves the theorem. $\square$

References

[1] N.N. Bautin, E.A. Leontovich, *Methods and Ways of the Qualitative Analysis of Dynamical Systems in a Plane*, Nauka, Moscow, 1990 (in Russian).

[2] A.D. Bazykin, *Nonlinear Dynamics of Interacting Populations*, World Scientific, New Jersey, 1998.

[3] H.W. Broer, V. Naudot, R. Roussarie, K. Saleh, Dynamics of a predator-prey model with non-monotonic response function, *Discrete Contin. Dyn. Syst. Ser. A* **18** (2007), 221–251.

[4] H.W. Broer, V.A. Gaiko, Global qualitative analysis of a quartic ecological model, *Nonlinear Anal.* **72** (2010), 628–634.

[5] V.A. Gaiko, *Global Bifurcation Theory and Hilbert's Sixteenth Problem*, Kluwer, Boston, 2003.

[6] V.A. Gaiko, Limit cycles of quadratic systems, *Nonlinear Anal.* **69** (2008), 2150–2157.

[7] V.A. Gaiko, Limit cycles of Liénard-type dynamical systems, *Cubo* **10** (2008), 115–132.

[8] V.A. Gaiko, On the geometry of polynomial dynamical systems, *J. Math. Sci.* **157** (2009), 400–412.

[9] V.A. Gaiko, A quadratic system with two parallel straight-line-isoclines, *Nonlinear Anal.* **71** (2009), 5860–5865.

[10] V.A. Gaiko, The geometry of limit cycle bifurcations in polynomial dynamical systems, *Discrete Contin. Dyn. Syst. Suppl.* **5** (2011), 447–456.

[11] V.A. Gaiko, Multiple limit cycle bifurcations of the FitzHugh–Nagumo neuronal model, *Nonlinear Anal.* **74** (2011), 7532–7542.

[12] V.A. Gaiko, On limit cycles surrounding a singular point, *Differ. Equ. Dyn. Syst.* **20** (2012), 329–337.

[13] V.A. Gaiko, The applied geometry of a general Liénard polynomial system, *Appl. Math. Letters* **25** (2012), 2327–2331.

[14] V.A. Gaiko, Limit cycle bifurcations of a general Liénard system with polynomial restoring and damping functions, *Int. J. Dyn. Syst. Differ. Equ.* **4** (2012), 242–254.

[15] V.A. Gaiko, Limit cycle bifurcations of a special Liénard polynomial system, *Adv. Dyn. Syst. Appl.* **9** (2014), 109–123.

[16] C.S. Holling, The functional response of predators to prey density and its role in mimicry and population regulation, *Mem. Entomol. Soc. Can.* **45** (1965), 3–60.

[17] Y. Lamontagne, C. Coutu, C. Rousseau, Bifurcation analysis of a predator–prey system with generalized Holling type III functional response, *J. Dyn. Diff. Equat.* **20** (2008), 535–571.

[18] X. Liu, Y. Liu, Q. Li, Multiple bifurcations in a discrete prey–preditor system with generalized Holling III functional response, *Discrete Dynamics in Nature and Society* (2015), http://dx.doi.org/10.1155/2015/245421, 10 p.

[19] L. Perko, *Differential Equations and Dynamical Systems*, Springer, New York, 2002.

[20] H. Zhu, S.A. Campbell, G.S.K. Wolkowicz, Bifurcation analysis of a predator–prey system with nonmonotonic functional response, *SIAM J. Appl. Math.* **63** (2002), 636–682.