arXiv:1304.6053v1 [math.GT] 22 Apr 2013

INTRODUCTION TO HIGH DIMENSIONAL KNOTS

EIJI OGASA

Abstract. This is an introductory article on high dimensional knots for the beginners. High dimensional knot theory is an exciting field. It is a field of knot theory, which is one of topology and is connected with many ones.

In this article we use few literal expressions, equations, functions, etc. We barely suppose that the readers have studied manifolds, homology theory, or topics beyond them.

Is there a nontrivial high dimensional knot? We first answer this question. After that, we explain local moves on high dimensional knots and the projections of high dimensional knots.

1. Introduction

This is an introductory article on high dimensional knots for the beginners. High dimensional knot theory is an exciting field. It is a field of knot theory, which is one of topology and is connected with many ones.

In this article we use few literal expressions, equations, functions, etc. We barely suppose that the readers have studied manifolds, homology theory, or topics beyond them. We only suppose that the readers know the n-dimensional spheres, the n-dimensional balls (or discs), and the n-dimensional Euclidean space $\mathbb{R}^n$. Here, n is any natural number.

A 1-dimensional knot is a circle in $\mathbb{R}^3$ which does not touch itself. Do you feel that there is an unknotted knot and a truly knotted knot? Yes, it is true.

A 2-dimensional knot is a sphere in $\mathbb{R}^4$ which does not touch itself. Is there a truly knotted 2-dimensional knot?

An n-dimensional knot is an n-sphere in $\mathbb{R}^{n+2}$ which does not touch itself ($\geqq 3$)? Is there a truly knotted n-dimensional knot?

We first answer these questions.

We write this article so that the odd pages are the right ones and that the even ones the left ones. When you read it, please do so. If you print out it, please do as they are. In particular, if you print out it in duplex printing, please note which are the right ones and the left ones.

Any nontrivial 1-dimensional knot is changed into the unknot by a sequence of crossing-changes:

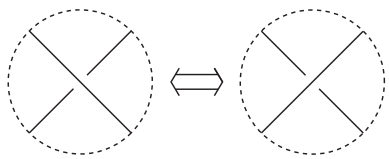

If two 1-dimensional knots K and K' in $\mathbb{R}^3$ differ only in the 3-ball B^3 as shown above, then we say that K is obtained from K' by a crossing-change.

Are there local moves on high dimensional knots like crossing-changes of 1-dimensional knots?

The projection of any nontrivial 1-dimensional knot is that of an unknotted knot. The projection is the image of the map $\mathbb{R}^3 \to \mathbb{R}^2$, $(x, y, z) \mapsto (x, y)$. Probably you will feel it is true. Yes. It is true. Indeed, the proof is easy.

If there is a nontrivial high dimensional knot, then is the projection of it that of an unknotted knot?

We will show high dimensional figures to explain high dimensional knots and links. We draw them conceptually. We want the readers to captures them intuitively. Imagine!

We use few literal expressions, equations, functions, etc. It is important to note that the level of the topics in mathematics and physics are not related to the complexity of the numbers and equations In fact, a way of few equations and the other way of many equations are equally important. Furthermore they are closely connected and often attack the same theme from different viewpoints.

We try to avoid using technical terms associated with manifolds, homology theory, or topics beyond them. Instead, the advanced readers may feel the explanation in this article to be quite loose. However, we put a high priority on explanations that beginners can understand intuitively. (Of course, the advanced readers understand high dimensional figures not only rigorously but also intuitively.)

Contents

1 Introduction

2 High dimensional knots and links exist

3 The projections of n-dimensional knots

4 Local moves on n-dimensional knots
- §4.1 Ribbon moves on n-dimensional knots
- §4.2 (p, q)-pass-moves on n-dimensional knots $(p + q = n + 1)$
- Appendix Twist-moves on $(2m + 1)$-dimensional knots and cross-ring-moves on 2-knots

2. High dimensional knots and links exist

We begin by explaining 1-dimensional knots.

If a single copy of S^1 is embedded in $\mathbb{R}^3$, it is called a 1-(dimensional) knot. Sometimes a knot means a 1-knot.

If we say that S^1 is embedded in $\mathbb{R}^3$, S^1 is included in $\mathbb{R}^3$ and S^1 does not touch itself. Embedding is a mathematical term. See text books on manifolds.

If a set of m copies of S^1 is embedded in $\mathbb{R}^3$, it is called an m-component 1(-dimensional) link. Sometimes a link means a 1-link.
Note to the advanced readers: We often replace $\mathbb{R}^3$ with S^3. We sometimes replace $\mathbb{R}^3$ with other manifolds than S^3.

Do you feel the following two knots seem to be different? Yes. It is true.

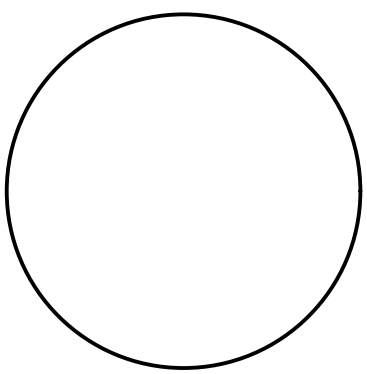

The trivial knot

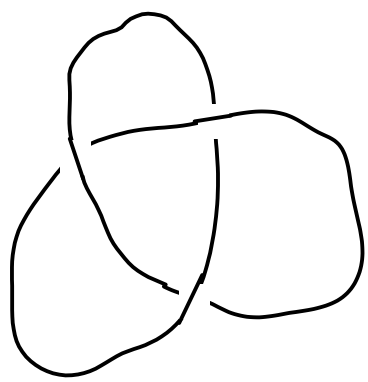

The trefoil knot

Roughly speaking, when we say that they are not the same, it means the following. In $\mathbb{R}^3$ it is impossible to manipulate the trefoil knot to the trivial knot if it is never touching itself during the process, where we prohibit the following procedure.

Indeed the knot is always not touching itself in the above procedure. Note that the knot is not thickened. You feel that it is natural to prohibit this procedure, don't you?

So, when we say that we move a knot such that it is always not touching itself, we suppose that we move a knot with 'tubular neighborhood' together and that the tubular neighborhood is not always touching itself. We can say that knots are 'thickened' when we consider the procedure that knots are moved.

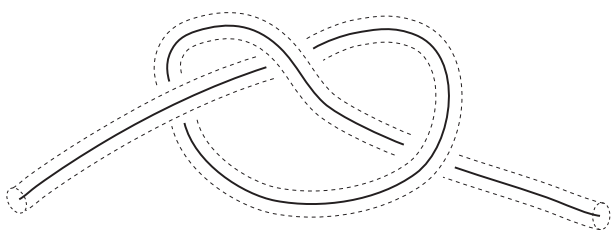

Note: In this article we move it smoothly. ('Smooth' is a mathematical term. However, if you currently associate the word 'smooth' with how it is used in daily life, please continue to do so.)

If a 1-knot K bounds an embedded 2-ball B^2 in $\mathbb{R}^3$, we say that K is the trivial knot or the unknot.

Suppose that an m-component 1-link L satisfies the following condition: 'Each component bounds an embedded 2-ball B^2 in $\mathbb{R}^3$. Each B^2 does not touch any other B^2.' Then we say that L is the trivial link.

It is known that there are countably infinitely many different non-trivial 1-knots.

In order to prove it, we use the Alexander polynomial, the Alexander module, the Jones polynomial, the fundamental groups, the signature, the knot cobordism groups, etc.

See the following textbooks for detailed explanations.

D. Rolfsen 'Knots and links' Publish and Perish

L.H.Kauffman 'Knots and Physics' World Scientific.

Well, can S^2 be 'knotted' in $\mathbb{R}^4$?

Can S^n be 'knotted' in $\mathbb{R}^{n+2}$?

Are there nontrivial high dimensional knots?

These are among the main themes of this section.

Next we explain 2-dimensional knots.

If a single copy of S^2 is embedded in $\mathbb{R}^4$, it is called a 2-(dimensional) knot.

If a set of m copies of S^2 is embedded in $\mathbb{R}^4$, it is called an m-component 2-(dimensional) link.

If a 2-knot K bounds an embedded 3-ball B^3 in $\mathbb{R}^4$, we say that K is the trivial knot.

Suppose that an m-component 2-link L satisfies the following condition. 'Each component bounds an embedded 3-ball B^3 in $\mathbb{R}^4$. Each B^3 does not touch any other B^3.' Then we say that L is the trivial link.

We say that two 2-links are the same if we move one to the other (smoothly) in $\mathbb{R}^4$ so that it does not touch itself, where we move it with 'tubular neighborhood' as in the 1-link case.

It is trivial that there is the 2-dimensional trivial knot (resp. 2-link).

There exist nontrivial 2-knots. We will explain it from here on.

We regard $\mathbb{R}^2$ as the result of rotating $\{(x, y)|x \geqq 0, \quad y = 0\}$ around the point $(0, 0)$.

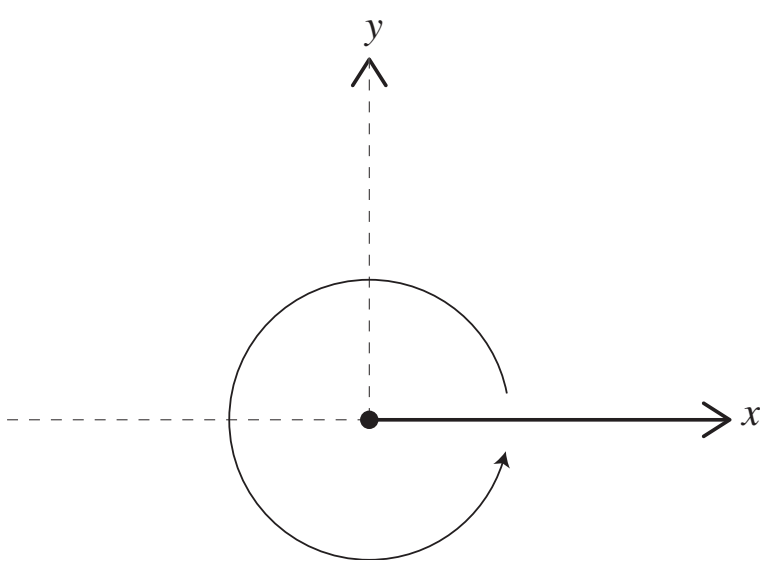

We regard $\mathbb{R}^3$ as the result of rotating $\{(x, y, z) | x \geqq 0, \quad y = 0\}$ around the z-axis. We draw the x-, $y-$, $z-$axis in a different fashion from what you are used to.

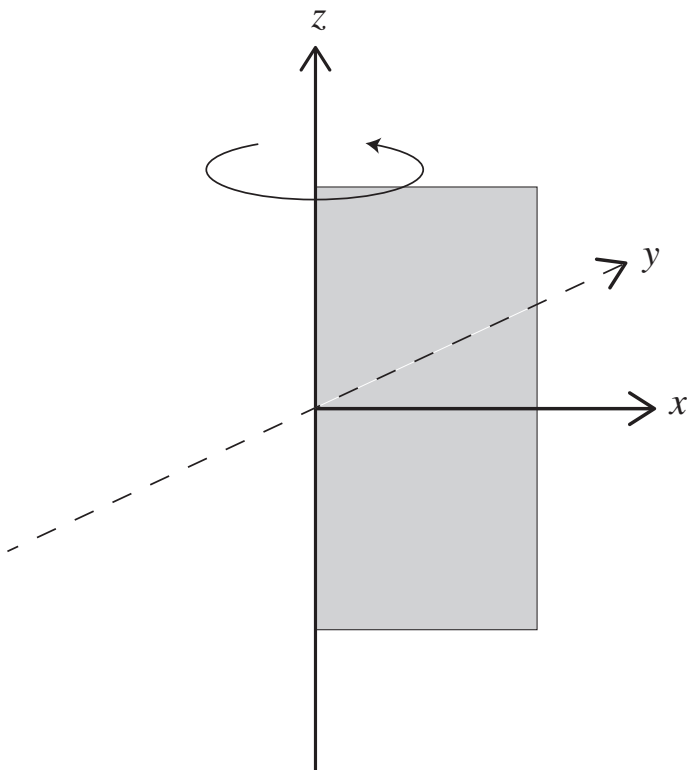

If we rotate the following arc around the dotted line in $\mathbb{R}^3$, then the result is S^2.

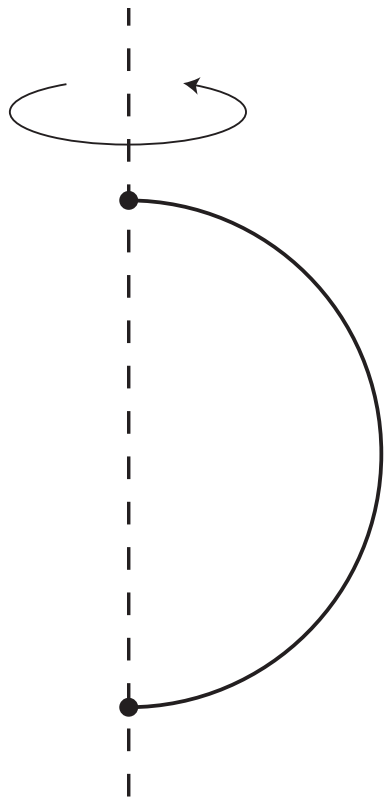

We regard $\mathbb{R}^4$ as the result of rotating
$\mathbb{R}^3_{\geq 0} = \{(x, y, z, w) | x \geqq 0, \quad y = 0\}$ around the zw-plane.

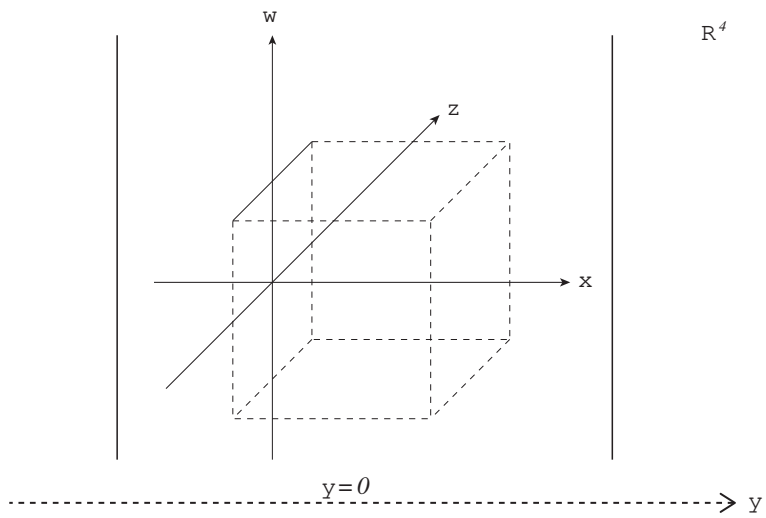

Suppose that there is a point in $\{(x, y, z) | x \geqq 0, \quad y = 0\}$ as shown below. When we rotate $\{(x, y, z) | x \geqq 0, \quad y = 0\}$ around the z-axis, rotate the point as well. Then we obtain S^1 in $\mathbb{R}^3$.

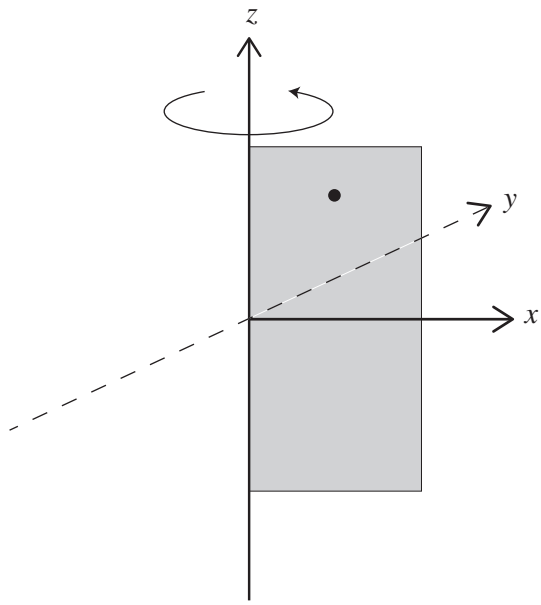

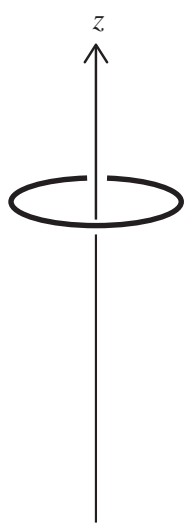

Suppose that there is an arc in
$\mathbb{R}^3_{\geq 0} = \{(x, y, z, w) | x \geqq 0, \quad y = 0\}$ as shown below.

When we rotate $\{(x, y, z, w) | x \geqq 0, \quad y = 0\}$ around the zw-plane, rotate the arc as well. Then we obtain S^2 in $\mathbb{R}^4$. Imagine! Thus we obtain a 2-knot.

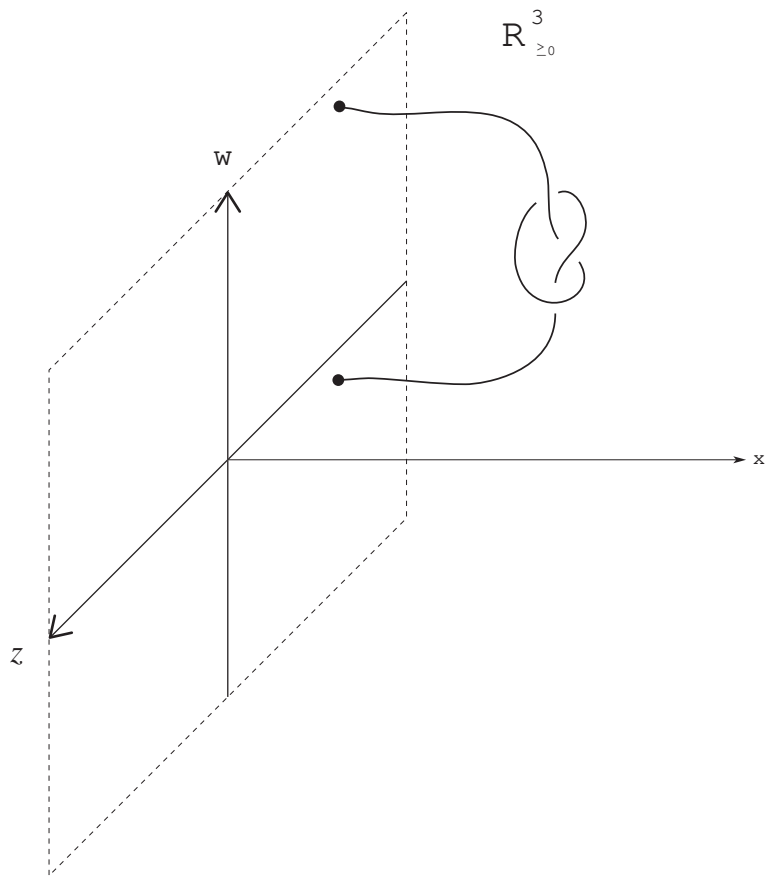

Let A and B be the endpoints of the arc. Suppose that A and B are in the wz-plane. Connect A with B by the dotted segment as shown below. Then a 1-knot is made from the arc and the dotted segment. Call this knot K.

The 2-knot made from this arc as shown in the last page is called the spun knot of K.

It is known that if K is a nontrivial 1-knot, then the spun-knot of K is a nontrivial 2-knot.

It is known that, there are countably infinitely many different 1-knots such that their spun knots are different each other. Thus there are countably infinitely many different 2-knots.

We can define the spun-link of a 1-link as in the same manner. It is known that there are countably infinitely many different 1-links such that their spun links are different each other. Thus there are countably infinitely many different 2-links.

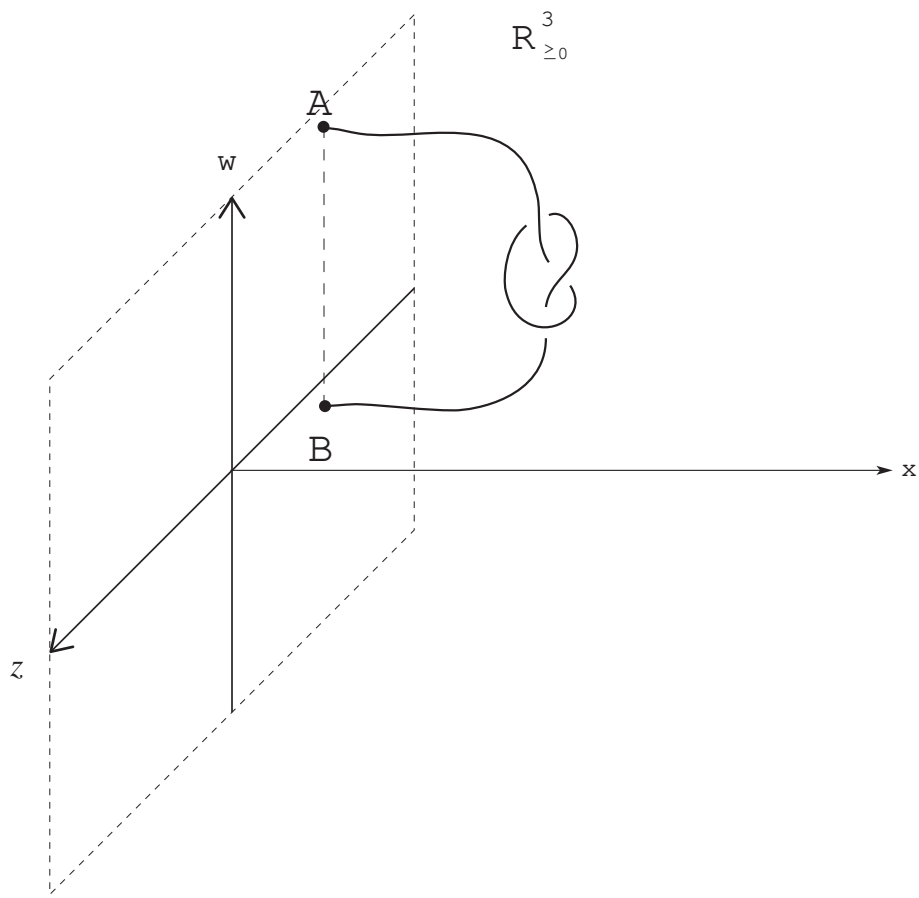

When we rotate $R^3_{\geqq 0} = \{(x, y, z, w) | x \geqq 0, \quad y = 0\}$ and the arc as well around the zw-plane, rotate the part of the arc between P and Q k-times as shown in the figure, where k is an integer.

Note that we rotate the dotted sphere as in the following figure. Associate this operation with 'the revolution and the rotation of the planet'.

We obtain a 2-knot in $\mathbb{R}^4$.

The result is called k-twist spun-knot of K. Note that spun knots are 0-twist spun-knots.

It is known that the 1-twist spun knot of any 1-knot is the trivial 2-knot.

It is known that there are countably infinitely many different 2-knots that are k-twist spun knots if $k \neq 0, \pm 1$.

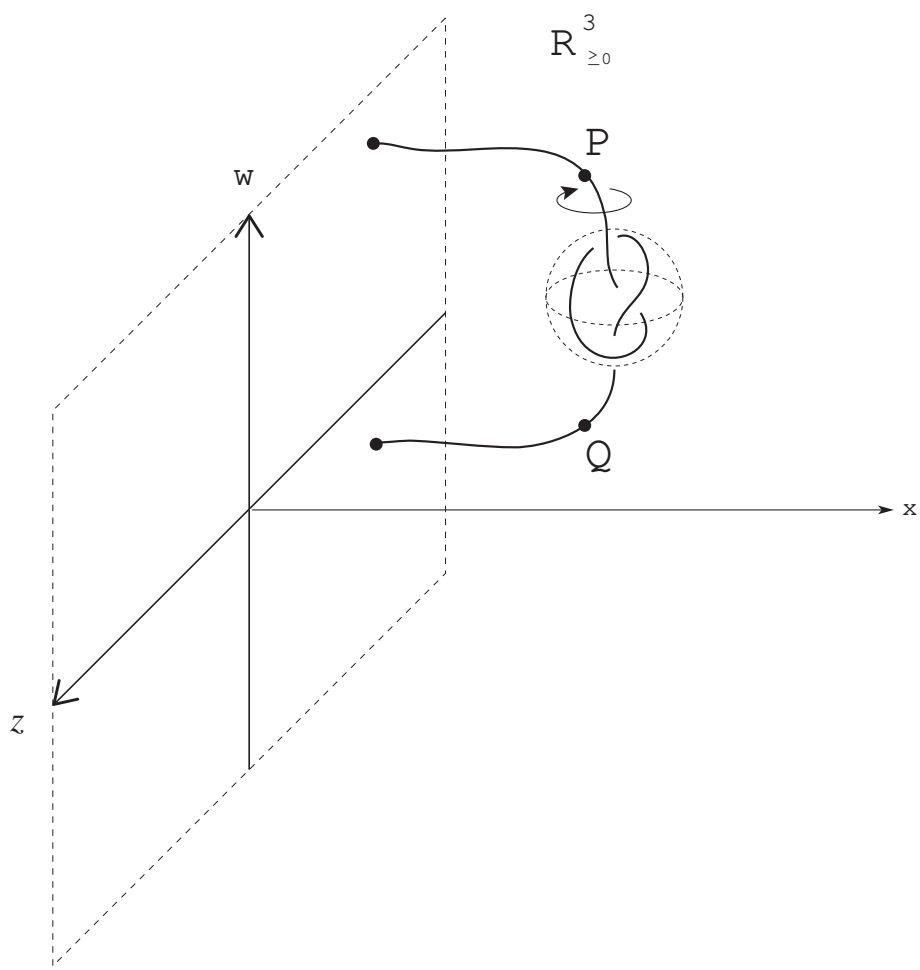

In order to prove that they are nontrivial, we use the Alexander polynomial, the Alexander module, the fundamental groups, the μ-invariant, the $\widetilde{\eta}$-invariant, etc.

Furthermore it is known that there are countably infinitely many nontrivial 2-knots which are not k-twist spun knot for any integer k.

See the following literature for detailed explanations.

E. Zeeman: 'Twisting spun knots', Trans. Amer. Math. Soc., 115, (1965) 471-495,

D. Rolfsen 'Knots and links' Publish and Perish,

J. Levine and K. Orr: 'A survey of applications of surgery to knot and link theory' *Surveys on surgery theory: surveys presented in honor of C.T.C. Wall Vol. 1, 345–364, Ann. of Math. Stud., 145, Princeton Univ. Press, Princeton, NJ, 2000.*

D. Ruberman 'Doubly slice knots and the Casson-Gordon invariants' Trans. Amer. Math. Soc. 279, 569-588, 1983, etc.

We explain n-dimensional knots.

We can define n-knots, n-links, the trivial n-knots, the trivial n-links, spun-knots of $(n-1)$-knots(resp $(n-1)$-links), k-twist spun-knots of $(n-1)$-knots, as in a similar fashion to the 2-knot case.

If a single copy of S^n is embedded in $\mathbb{R}^{n+2}$, it is called a n-(dimensional) knot.

If a set of m copies of S^n is embedded in $\mathbb{R}^{n+2}$, it is called an m-component n-(dimensional)link.

If a n-knot K bounds an embedded n-ball B^n in $\mathbb{R}^{n+2}$, we say that K is the trivial knot.

Suppose that an m-component n-link L satisfies the following condition. 'Each component bounds an embedded n-ball B^n in $\mathbb{R}^{n+2}$. Each B^n does not touch any other B^n.' Then we say that L is the trivial link.

We say that two n-links are the same if we move one to the other (smoothly) in $\mathbb{R}^{n+2}$ such that it is always not touching itself, where we move it with 'tubular neighborhood' as in the 1-link case.

It is trivial that there is the n-dimensional trivial knot (resp. n-link).

To the advanced readers: We usually define n-knots in S^{n+2} rather than $\mathbb{R}^{n+2}$ in the smooth (resp. PL, topological) category ($n \geqq 1$). In the smooth category we usually define it to be a codimensision two smooth submanifold of S^{n+2} which is PL homeomorphic to the standard n-sphere. It means that some n-knots for some natural numbers n are exotic spheres. See the following papers.

J. W. Milnor: On manifolds homeomorphic to the 7-sphere *Annals of Mathematics* 64 (1956) 399405.

J. Levine: Knot cobordism in codimension two, *Comment. Math. Helv.*, 44, 229-244, 1969.

We regard $\mathbb{R}^{n+2}$ as the result of rotating
$R^{n+1}_{\geq 0} = \{(x_1, ..., x_{n+2}) | x_1 \geqq 0, \quad x_2 = 0\}$ around
the $x_3 ... x_{n+2}$-space $= \{(x_1, ..., x_{n+2}) | x_1 = 0, \quad x_2 = 0\}$.

Suppose that there is a B^{n-1} in

$R^{n+1}_{\geq 0} = \{(x_1, ..., x_{n+2}) | x_1 \geqq 0, \quad x_2 = 0\}$

and that the boundary of B^{n-1} is in

the $x_3 ... x_{n+2}$-space$= \{(x_1, ..., x_{n+2}) | x_1 = 0, \quad x_2 = 0\}$.

When we rotate $R^{n+1}_{\geq 0} = \{(x_1, ..., x_{n+2}) | x_1 \geqq 0, \quad x_2 = 0\}$ around the $x_3 ... x_{n+2}$-space, rotate the B^{n-1} as well. Then we obtain S^n in $\mathbb{R}^{n+2}$. Imagine! Thus we obtain an n-knot.

We can make an $(n-1)$-knot K from the B^{n-1} in

$R^{n+1}_{\geq 0} = \{(x_1, ..., x_{n+2}) | x_1 \geqq 0, \quad x_2 = 0\}$

as in a similar fashion to the case that we make spun-knots from 1-knots.

The n-knot made from this B^{n-1} is called the spun-knot of K.

It is known that there are countably infinitely many different $(n-1)$-knots such that their spun knots are different each other. Thus there are countably infinitely many different n-knots ($n \geqq 3$).

We can define the spun-link of an $(n-1)$-link as in the same manner. It is known that there are countably infinitely many different $(n-1)$-links such that their spun links are different each other. Thus there are countably infinitely many different n-links.

We can define k-twist spun-knot of K as follows. When we rotate B^{n-1} around the $x_3 ... x_{n+2}$-space, we rotate a part of B^{n-1} as in a similar fashion to the case that we make k-twist spun knots of 1-knots.

It is known that the 1-twist spun knot of any $(n-1)$-knot is the trivial n-knot.

It is known that there are countably infinitely many different n-knots which are k-twist spun knots for each $k \neq 0, \pm 1$.

In order to prove that they are nontrivial, we use the Alexander polynomial, the Alexander module, the fundamental groups, the μ-invariant, the $\widetilde{\eta}$-invariant, the signature, the Arf invariant, knot cobordism groups, etc.

Furthermore it is known the following: Let n be an integer $\geqq 3$. There are countably infinitely many nontrivial n-knots which are not k-twist spun knot for any integer k.

To the advanced readers: If an n-knot K is an exotic sphere, the k-twist spun knot of K is defined.

We can also discuss S^p in $\mathbb{R}^n$ even if $n > p + 2$. See
A. Haefliger 'Knotted (4k - 1)-Spheres in 6k-Space' Annals of Mathematics, Vol. 75, 1962, pp. 452-466
for detailed explanations.

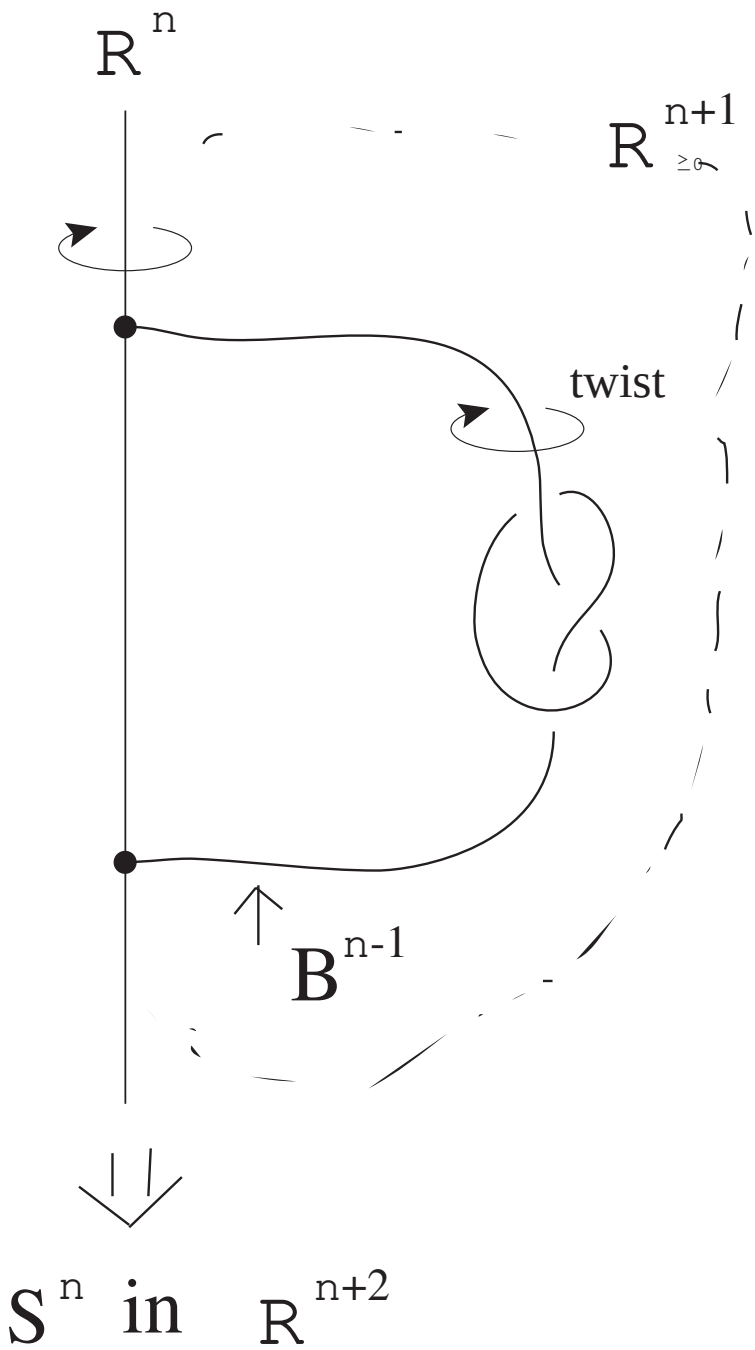
R n
R n+1 ≥0
twist
B n-1
S n in R n+2

3. The projections of n-dimensional knots

In this section, we explain 'the projections of n-knots'. We begin by asking a question.

Question: Suppose that S^1 is in $\mathbb{R}^2$. It may touch itself. If it touches itself, it touches itself like the intersection .

Suppose the following conditions.
(1)The inverse image of any point in this figure is a single point except for the intersection.
(2) The inverse image of the intersection is a set of two points.
(3) The inverse image of each segment in the figure of the intersection is connected.

Note: the word 'connected' is a mathematical terminology. Roughly speaking, 'A is connected' means 'A consists of a single part'.

Then is this the projection of a 1-knot in $\mathbb{R}^3$?

The projection of a 1-knot is the image of the knot by a map from $\mathbb{R}^3$ to $\mathbb{R}^2$; $(x, y, z) \mapsto (x, y)$.

Answer: Yes. (The proof is easy. Please try.)

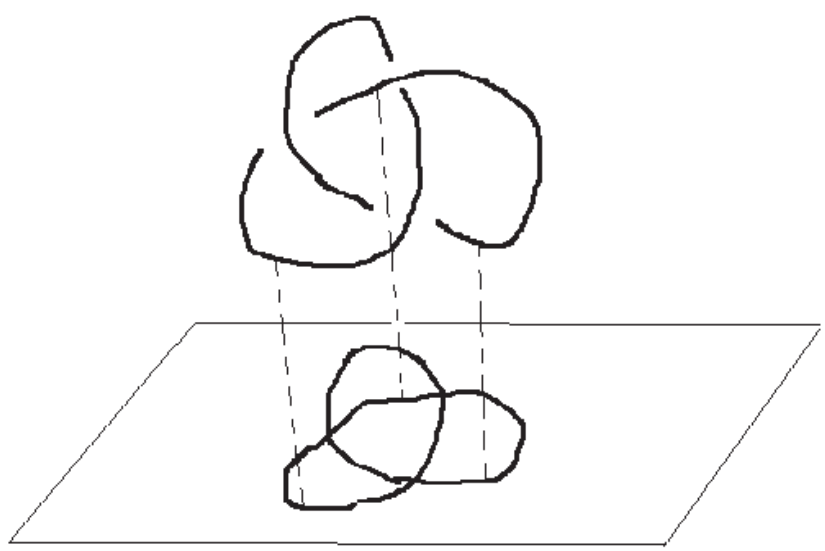

Take S^2 in $\mathbb{R}^3$. We suppose that S^2 may touch itself but that if so, it touches itself as shown below.

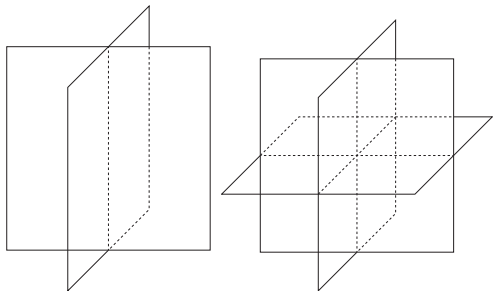

Here, two or three sheets intersect. The sheets can be bended a little. Then we say that S^2 is immersed in $\mathbb{R}^3$ and that the S^2 which touches itself is an immersion of S^2. See textbooks on manifolds for immersion.

Question: For an arbitrary immersion of S^2 into $\mathbb{R}^3$, is there a 2-knot in $\mathbb{R}^4$ whose projection is the immersion?

The corresponding problem in the 1-knot case is written in the previous page.

Answer: No. (Giller proved.)

C. Giller: Towards a classical knot theory for surfaces in $\mathbb{R}^4$ *Illinois. J. Math.* 26 (1982) 591-631.

Of course, there are countably infinitely many immersions of S^2 into $\mathbb{R}^3$ which are the projections of 2-knots. Here, we ask whether any immersion is the projection of a 2-knot.

The idea of making an immersion of S^2 into $\mathbb{R}^3$ which is not the projection of any 2-knot in $\mathbb{R}^4$ is as follows.

Take the Boy surface in $\mathbb{R}^3$ (see the latter half of this page for the Boy surface). Take two sheets at each point in the Boy surface as follows.

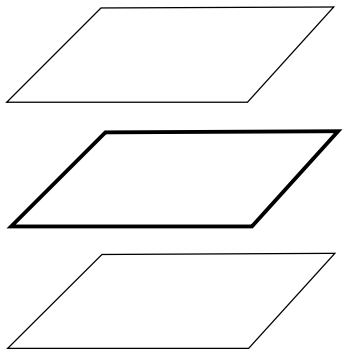

A part of a new surface

A part of the Boy surface

A part of a new surface

For a point in the self-intersection of the Boy surface, do the same procedure. The union of such all sheets makes an immersion of S^2 into $\mathbb{R}^3$ which is not the projection of any 2-knot.

See Boy's original paper for the Boy surface. P121 of Milnor and Stasheff's textbook quotes Boy's paper.

W. Boy: Über die Curvatura integra und die Topologie geschlossener Flchen, *Math. Ann.* 57 (1903) 151-184.

J. W. Milnor and J. D. Stasheff: Characteristic classes. *Annals of Mathematics Studies, No. 76. Princeton University Press* 1974.

We have created a way to construct the Boy surface by using a pair of scissors, a piece of paper, and a strip of scotch tape. and wrote it in the article

Make your Boy surface, arXiv:1303.6448 math.GT.

We made a movie of our paper-craft. We put it in

http://www.geocities.jp/n_dimension_n_dimension/MakeyourBoysurface.html

Don't forget the three _ in the address if you type it.
It is connected with the author's website

http://www.geocities.jp/n_dimension_n_dimension/list.html

Click the indication: The movie 'Make your Boy surface' in the first few lines in his one.

You can find his website by typing in the author's name 'Eiji Ogasa' in the search engine although you will not type the address of the website.

It is natural to ask the following question, which is a high dimensional version of the earlier question.

Question: Take S^n in $\mathbb{R}^{n+1}$. S^n may touch itself.

For such an arbitrary S^n in $\mathbb{R}^{n+1}$, is there an n-knot in $\mathbb{R}^{n+2}$ whose projection is the S^n in $\mathbb{R}^{n+1}$?

Note: The projection of an n-knot K is the image of K by the map from $\mathbb{R}^{n+2}$ to $\mathbb{R}^{n+1}$; $(x_1, ..., x_{n+1}, x_{n+2}) \mapsto (x_1, ..., x_{n+1})$.

We found that the answer is negative for any integer $\geqq 3$.

We made such an immersion of S^n into $\mathbb{R}^{n+1}$ in an explicit way. (Note that we can also define an immersion of manifolds in the high dimensional case. See textbooks on manifolds for detailed explanations.)

The idea of construction: We rotate the immersion of S^{n-1} as making spun-knots and obtain the immersion of S^n for $n \geqq 3$. The $n = 2$ case is the example which is made earlier by using the Boy surface.

This is the sub-theme of the author's paper:
E. Ogasa 'Singularities of projections of n-dimensional knots', Mathematical Proceedings of Cambridge Philosophical Society, 126, 1999, 511-519.

We also found the following. It is the main theme of the above paper.

Consider the following question.

Question: Take an n-knot K in $\mathbb{R}^{n+2}$. Take the projection P of K. Note that P is in $\mathbb{R}^{n+1}$. P is S^n in $\mathbb{R}^{n+1}$ such that S^n may touch itself.

For such an arbitrary S^n in $\mathbb{R}^{n+1}$, is there a trivial n-knot in $\mathbb{R}^{n+2}$ whose projection is the S^n in $\mathbb{R}^{n+1}$?

Note that the difference between the problem right above and the earlier problem.

To the advanced readers: Suppose that P is an immersion. How about it?

Suppose that $n = 1$ and that the projection P is an immersion S^1 into $\mathbb{R}^2$. Then it is almost trivial that the answer is positive. Please prove so.

The following figure is an example.

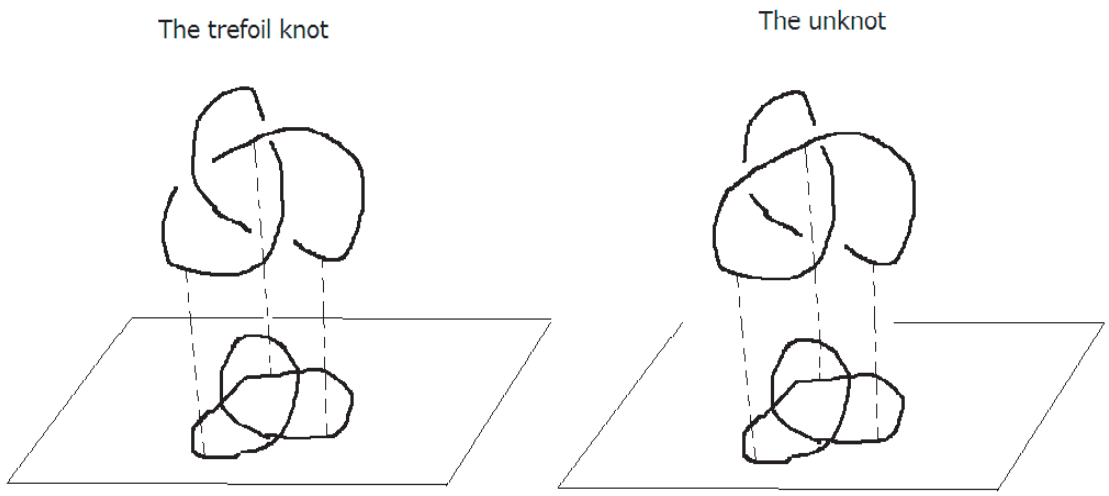

We found that the answer is negative for any integer $\geqq 3$.

We made an immersion of S^n into $\mathbb{R}^{n+1}$ which is the projection of a nontrivial n-knot but which is not the projection of any trivial n-knot in an explicit way. We used 'the K3 surface'.

To the advanced readers: The singularity of our immersion consists of only double points.

The $n = 2$ case is open. Please solve.

See the author's paper (1999) in a few pages back, which is [36] in References. and
E. Ogasa 'The projections of n-knots which are not the projection of any unknotted knot' Journal of knot theory and its ramifications, 10, 2001, 121–132.

4. Local moves on n-dimensional knots

If two 1-dimensional links K and K' in $\mathbb{R}^3$ differ only in the 3-ball B^3 as shown below,

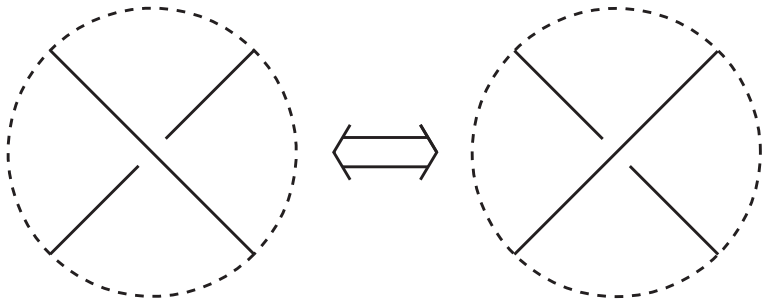

then we say that K is obtained from K' by a crossing-change.

Let $K_1, ..., K_\mu$ be 1-links. If K_ν is obtained from $K_{\nu-1}$ by a crossing-change ($2 \leqq \nu \leqq \mu$), then we say that K_μ is obtained from K_1 by a sequence of a finite numbers of crossing-changes.

It is known that any m-component 1-link is obtained from the trivial m-component 1-link by a sequence of a finite number of crossing-changes. The proof is easy. Please try.

It is important to consider such a procedure that we change a knot by 'local moves' as shown above.

How about 'local moves on high dimensional knots'?

It is the main theme of this section.

We show an example that crossing-changes make a nontrivial knot into the unknot.

This 1(-dimensional) link

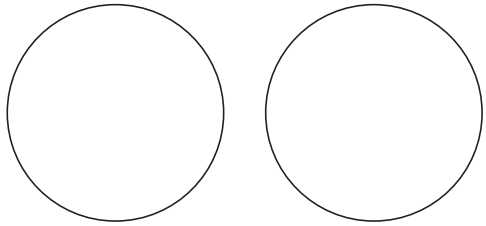

the trivial link

is called the (1-dimensional 2-component) trivial link.

This 1-link

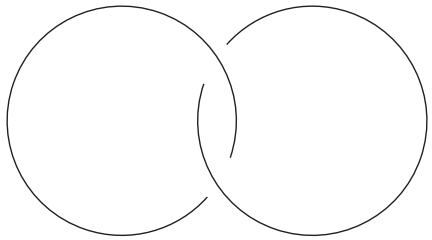

the Hopf link

is called the Hopf link. Hopf is the name of a mathematician who studied this link.

The two 1-links have a different property.

Take a disc $D^2 \subset \mathbb{R}^3$.

We suppose that the disc does not touch itself. (Then we say that this disc is embedded in $\mathbb{R}^3$. See textbooks on manifolds for detail. We usually suppose the condition on relative topology furthermore.)

The boundary of D^2 is one of the two components of a 1-link. Here, we do not care whether D^2 touches the other component of the link or not.

Can we take D^2 so that D^2 does not touch the other component of the link?

In the case of the trivial link the answer is affirmative.

In the case of the Hopf link the answer is negative.

Do you feel they are true? Indeed, it is true.

We prove it by using the fundamental group or the homology groups of $\mathbb{R}^3 -$(one of the two S^1).

A crossing-change makes the Hopf link into the trivial link as follows.

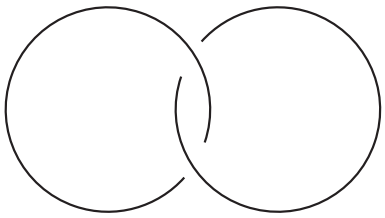

the Hopf link

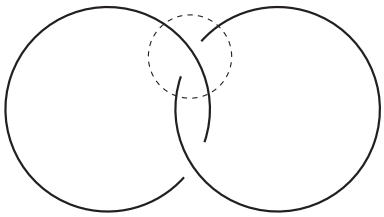

crossing-change

in

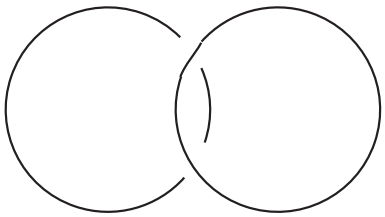

the trivial link

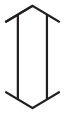

same

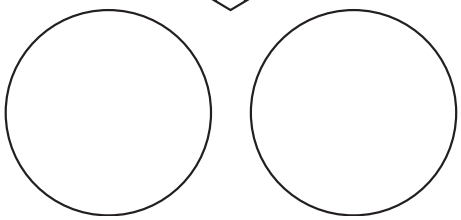

We will generalize this example and consider a higher dimensional case from here on.

§ **4.1.** Ribbon moves on n-dimensional knots

We construct two types, L_0 and L_1, of 'S^1 and S^2 in $\mathbb{R}^4$ such that S^1 does not touch S^2 and that S^1 (resp. S^2) does not touch itself.

L_0: S^1 bounds an embedded 2-dimensional disc D^2 in $\mathbb{R}^4$.
S^2 bounds an embedded 3-dimensional ball B^3 in $\mathbb{R}^4$.
B^3 does not touch D^2.

Probably you will feel L_0 exists. Indeed, it is true.

L_1: S^1 bounds an embedded 2-dimensional disc D^2 in $\mathbb{R}^4$ if we do not care whether D^2 touches S^2 or not.
S^2 bounds an embedded 3-dimensional ball B^3 in $\mathbb{R}^4$ if we do not care whether B^3 touches S^1 or not.
D^2 definitely touches S^2 even if we take D^2 in any way.
We can take D^2 such that D^2 touches S^2 at a single point. (To the advanced readers. We suppose that they intersect transversely.)

In fact, such L_1 exists.
Can you imagine L_1?
Can you construct L_1?

We construct L_1 from here on.

Note that L_0 and L_1 are the name used only in this article.

Regard $\mathbb{R}^4$ as the result of rotating
$R^3_{\geq 0} = (x, y, z, t) | x \geqq 0, y = 0$ around the zw-plane.
(Recall the way when we define spun-knots.)

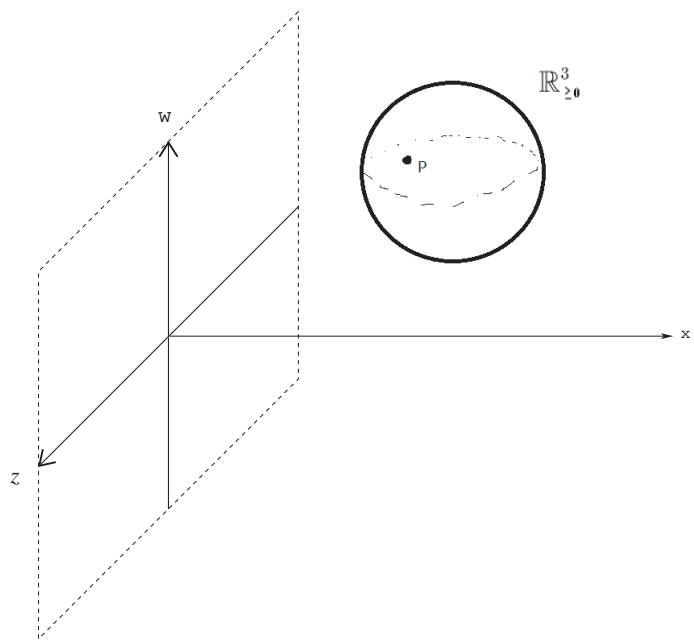

Take S^2 in $R^3_{\geq 0}$. Take an embedded 3-dimensional ball B^3 in $R^3_{\geq 0}$. Take a point P in B^3 such that P is not included in S^2. When we rotate $R^3_{\geq 0}$ around the zw-plane, rotate P as well but stop S^2 at the first place. Then P becomes a circle S^1. This situation is drawn conceptually as shown in the right page.

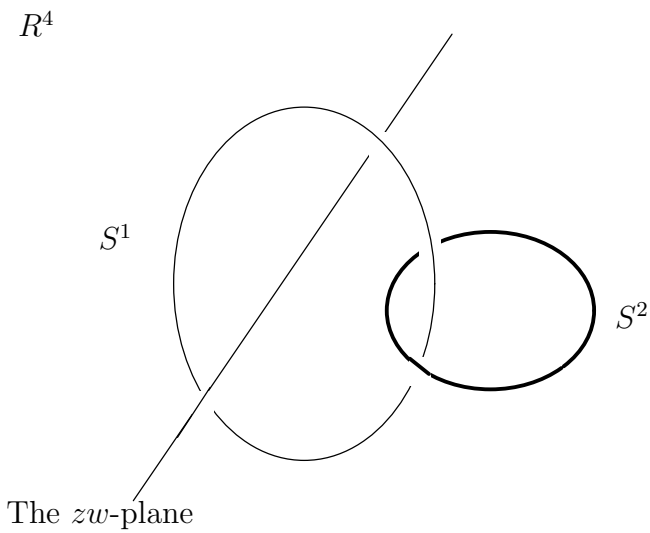

This S^1 and S^2 makes L_1.

We can prove that this L_1 satisfies the required condition by using the homology groups or the fundamental group of $\mathbb{R}^4 - S^2$ or by using the homology groups of $\mathbb{R}^4 - S^1$.

We draw figures much more conceptually from here on than the previous figures have been.

Imagine!

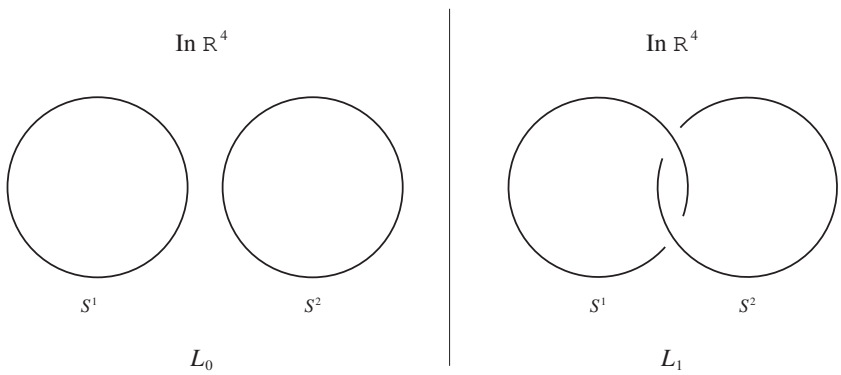

L_1 is changed into L_0 by a local move as shown on the right page.

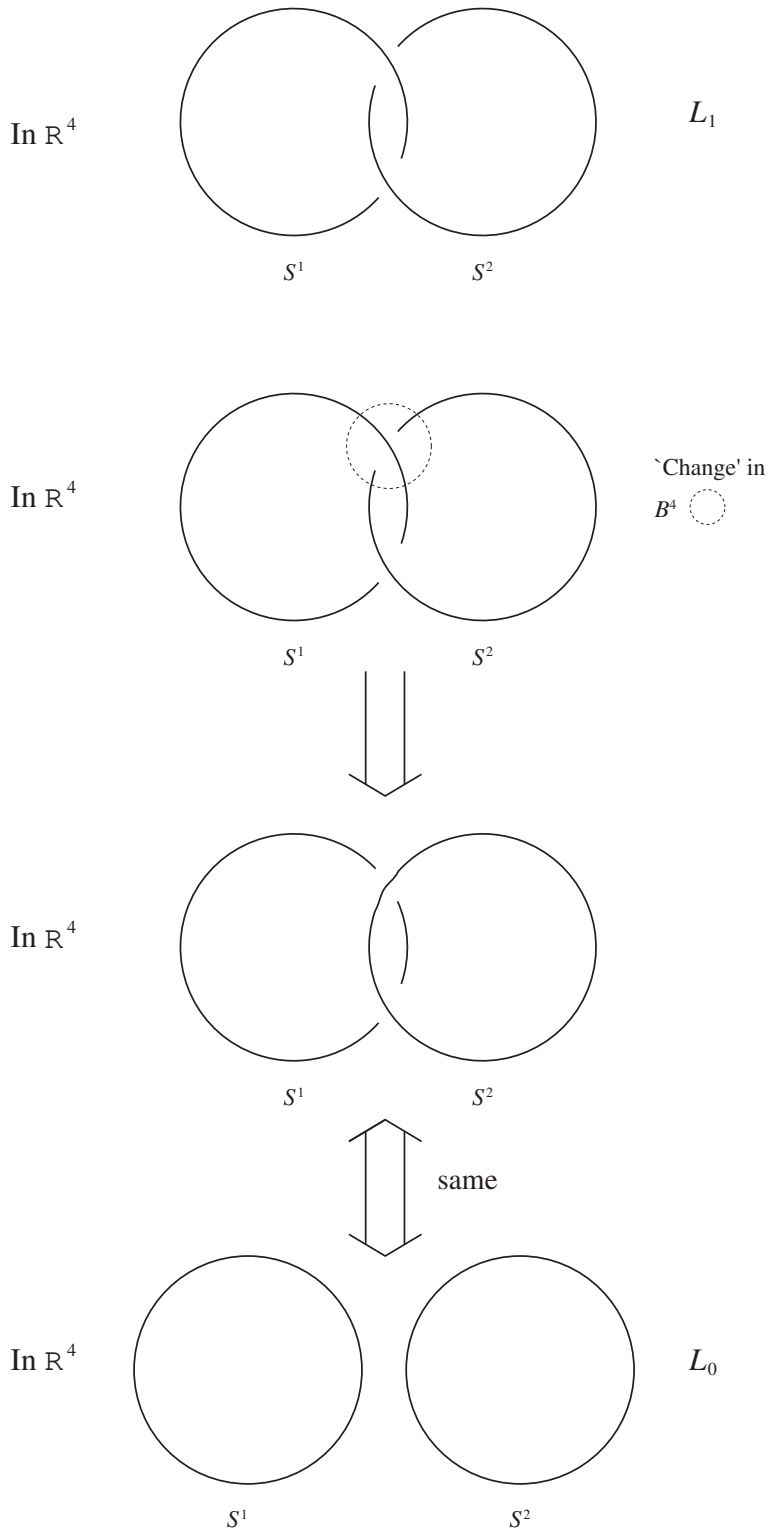
In $\mathbb{R}^4$
L_1
S^1
S^2
In $\mathbb{R}^4$
`Change' in
B^4
S^1
S^2
In $\mathbb{R}^4$
S^1
S^2
same
In $\mathbb{R}^4$
L_0
S^1
S^2

'The local move' in B^4 in the previous page is drawn as shown on the right page. Note B^n is the n-dimensional ball ($n \in \mathbb{N}$). This procedure is called ribbon-moves.

We say that L_1 (resp. L_0) is changed into L_0 (resp. L_1) by one ribbon-move.

We will draw a little more rigorous figure of this procedure in a few pages.

Note to the advanced readers: We will write the rigorous definition of ribbon-moves by using coordinates in a few pages.

Note to the beginners: Although we will write the definition by using coordinates, the way (i) is better than the way (ii).
(i) To perceive it intuitively the first time around. After that, understand the definition by using coordinates.
(ii)To try to understand it by coordinate representation the first time around.

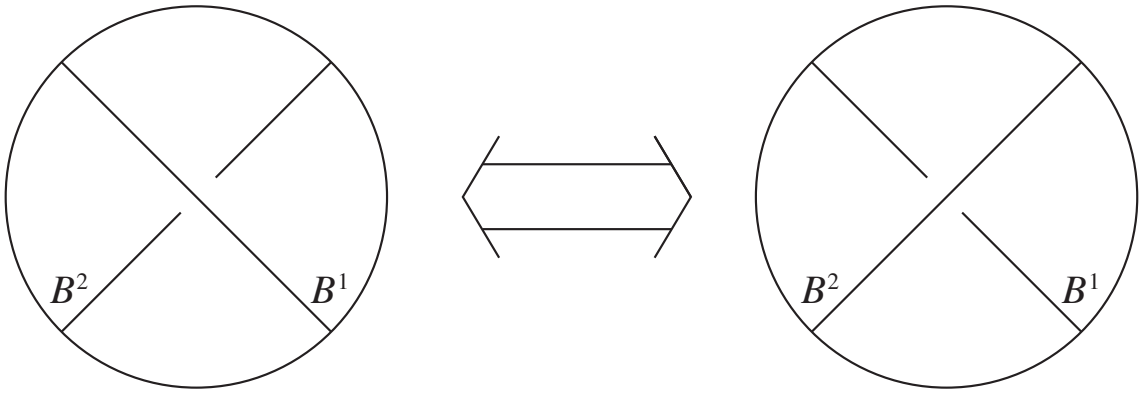

B^4 $\qquad$ B^4

$$S^2 \cap B^4 = B^2$$
$$S^1 \cap B^4 = B^1$$

Note to the advanced readers: We draw a little more explicit figure of the ribbon-move. We will write the definition of ribbon-moves rigorously in a few pages by using the following figures.

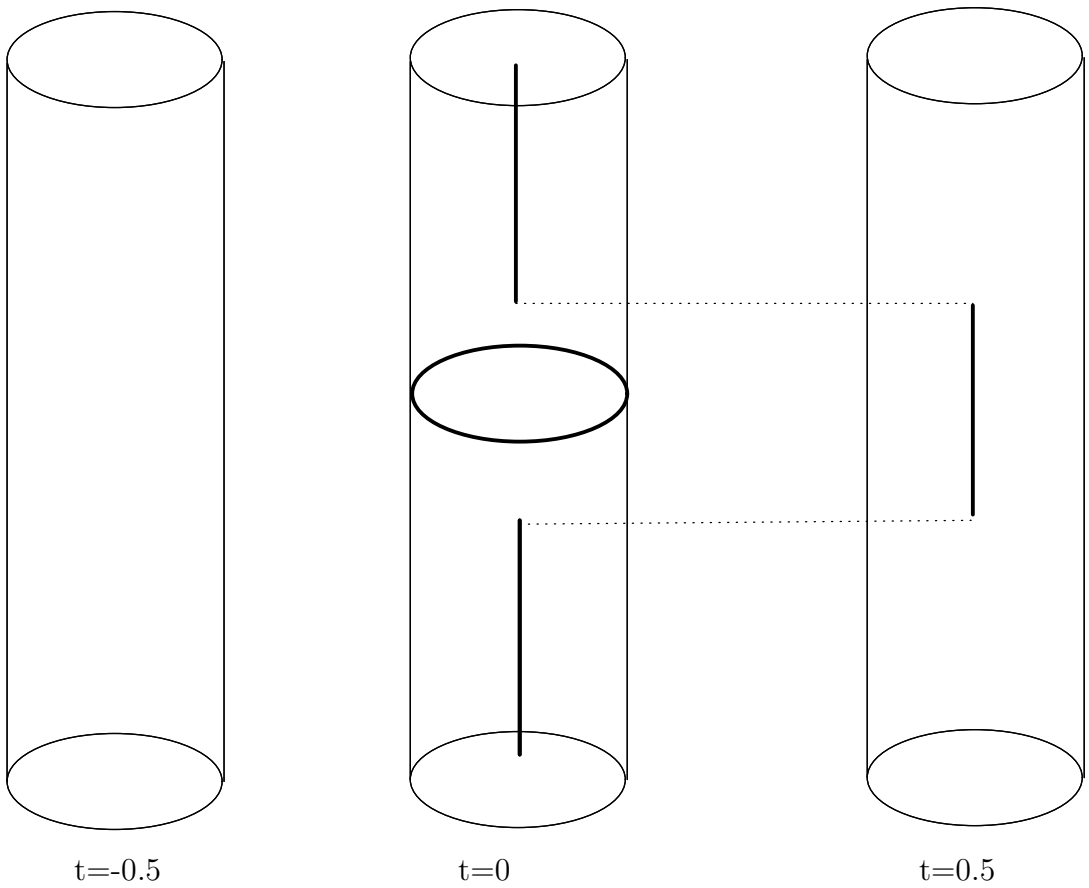

Figure 1

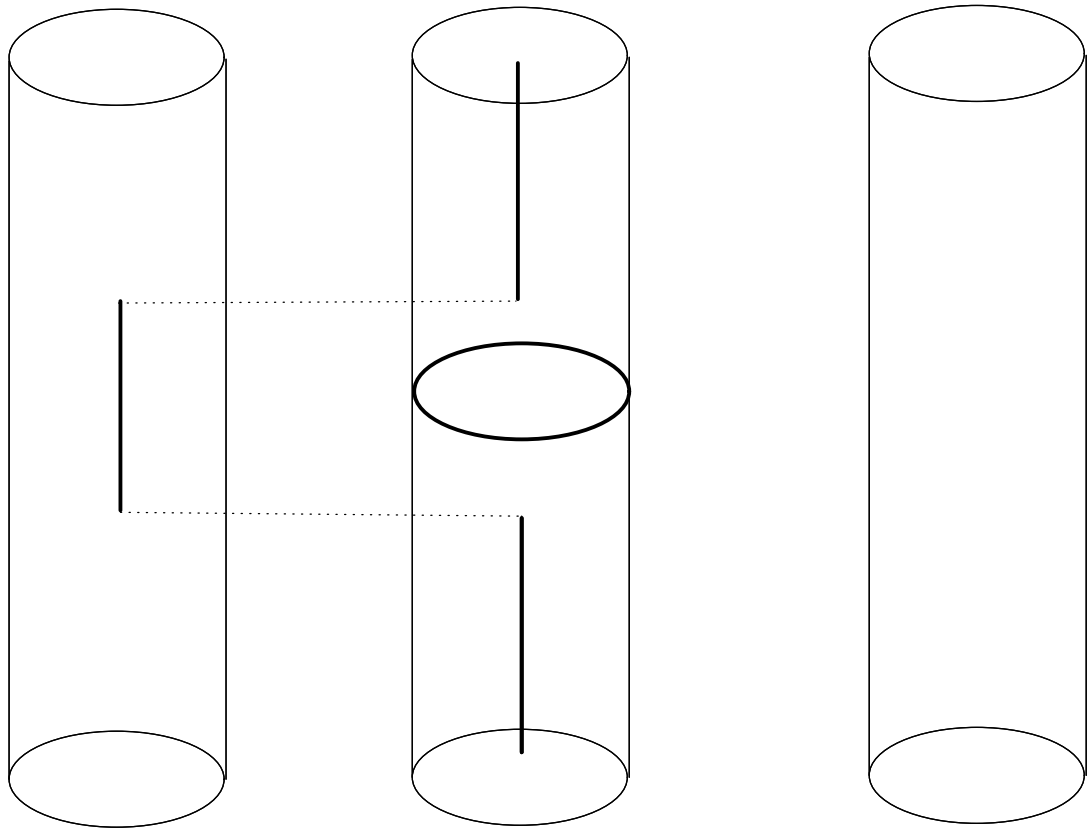

Figure 2

Note to the advanced readers: We write the definition of the local move rigorously by using the figures in the previous two pages. We use some mathematical terms, so please check the literature.

Let K_1 and K_2 be sets of S^1 and S^2 in $\mathbb{R}^4$. We say that K_2 is obtained from K_1 by one *ribbon-move* if there is a 4-ball B embedded in $\mathbb{R}^4$ with the following properties.

(1) K_1 coincides with K_2 in $\mathbb{R}^4 -$ (the interior of B). This identity map from $K_1 -$ (the interior of B) to $K_2 -$ (the interior of B) is orientation preserving.

(2) $B \cap K_1$ is drawn as shown in Figure 1. $B \cap K_2$ is drawn as shown in Figure 2.

Note: $\cap$ denotes the intersection. See textbooks on set theory for the intersection of sets.

We regard B as (a closed 2-disc)$\times[0,1] \times \{t| -1 \leqq t \leqq 1\}$. We suppose $B_t =$(a closed 2-disc)$\times[0,1] \times \{t\}$. Then $B = \cup B_t$. In Figure 1 and 2 we draw $B_{-0.5}, B_0, B_{0.5}$ in B. We draw K_1 and K_2 by the bold line. The fine line denotes ∂B_t. Here, ∂X means the boundary of X.

$B \cap K_1$ (resp. $B \cap K_2$) is diffeomorphic to $D^2 \amalg$ (a segment$[0,1]$).

Note: $\amalg$ denotes the disjoint union. See textbooks on set theory for the disjoint union.

Note that $[a,b]$ means $\{x|a \leqq x \leqq b\}$.

$B \cap K_1$ has the following properties: $B_t \cap K_1$ is empty for $-1 \leqq t < 0$ and $0.5 < t \leqq 1$. $B_0 \cap K_1$ is diffeomorphic to $D^2 \amalg ([0,0.3]) \amalg ([0.7,1])$. $B_{0.5} \cap K_1$ is diffeomorphic to $([0.3,0.7])$. $B_t \cap K_1$ is diffeomorphic to two points for $0 < t < 0.5$. (Here, we draw $[0,1]$ to have the corner in B_0 and in $B_{0.5}$. Strictly to say, $B \cap K_1$ in B is a smooth embedding that is obtained by making the corner smooth.)

$B \cap K_2$ has the following properties: $B_t \cap K_2$ is empty for $-1 \leqq t < -0.5$ and $0 < t \leqq 1$. $B_0 \cap K_2$ is diffeomorphic to $D^2 \amalg ([0,0.3]) \amalg ([0.7,1])$. $B_{-0.5} \cap K_2$ is diffeomorphic to $([0.3,0.7])$. $B_t \cap K_2$ is diffeomorphic to two points for $-0.5 < t < 0$. (Here, we draw $[0,1]$ to have the corner in B_0 and in $B_{-0.5}$. Strictly to say, $B \cap K_1$ in B is a smooth embedding that is obtained by making the corner smooth.)

In Figure 1 (resp. 2) there are an oriented segment $[0,1]$ and an oriented disc D^2 as we stated above. We do not make any assumption about the orientation of the segment and the disc. The orientation of $B \cap K_1$ (resp. $B \cap K_2$) coincides with that of the segment and that of the disc.

If K_1 is obtained from K_2 by one ribbon-move, then we also say that K_2 is obtained from K_1 by one *ribbon-move*.

Let K_1 and K_2 be two sets of S^1 and S^2 in $\mathbb{R}^4$. K_1 and K_2 are said to be *ribbon-move-equivalent* if there are sets of S^1 and S^2 in $\mathbb{R}^4$, $K_1 = \bar{K}_1, \bar{K}_2, ..., \bar{K}_{r-1}, \bar{K}_r = K_2$ (r, p are natural numbers and $p \geq 2$) such that $\bar{K}_i$ is obtained from $\bar{K}_{i-1}$ ($1 < i \leqq r$) by one ribbon-move.

Next we consider 'S^2 and T^2 in $\mathbb{R}^4$'. Here, T^2 denotes the torus.

The torus is

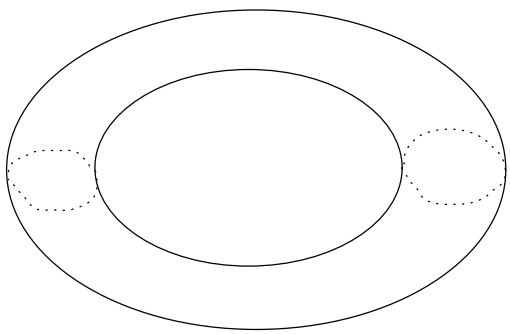

like an inner tube. Note that the interior of an inner tube is empty. If the interior is filled, then it is called the solid torus.

We construct two types, L_0 and L_1, of 'S^2 and T^2 in $\mathbb{R}^4$ such that T^2 does not touch S^2 and that T^2 (resp. S^2) does not touch itself.

L_0: S^2 bounds a 3-dimensional ball B^3 embedded in $\mathbb{R}^4$.
T^2 bounds the solid torus embedded in $\mathbb{R}^4$.
B^3 does not touch the solid torus.

L_1: S^2 bounds a 3-dimensional ball B^3 embedded in $\mathbb{R}^4$, where we do not care whether B^3 touches T^2 or not.
T^2 bounds the solid torus embedded in $\mathbb{R}^4$ so that the solid torus does not touch S^2.
B^3 definitely touches the solid torus even if we take them in any way.
We can take B^3 and the solid torus so that their intersection is a single 2-dimensional ball.

Probably you will feel L_0 exists. Indeed, it is true.
Can you imagine L_1?
Can you construct L_1?
We construct L_1 from here on.

Recall the construction of L_1 of 'S^1 and S^2 in R^4 in a few pages back. Take a circle C instead of the point P in B^3 such that C does not touch S^2.

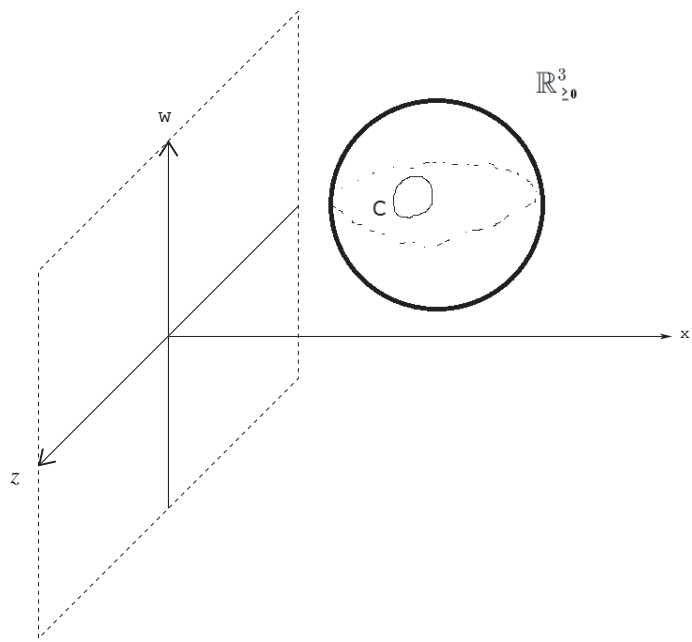

When we rotate $R^3_{\geq 0}$ around the zw-plane, rotate C as well but stop S^2 at the first place. Then C becomes a torus T^2.

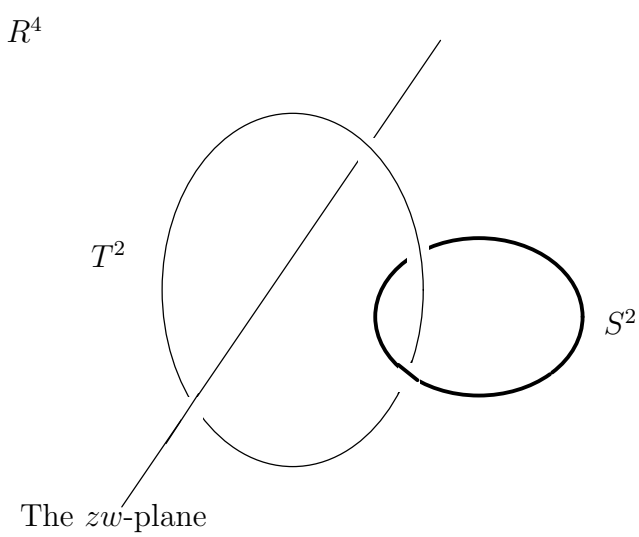

This T^2 and S^2 makes L_1.

We draw L_0 and L_1 conceptually as shown below.

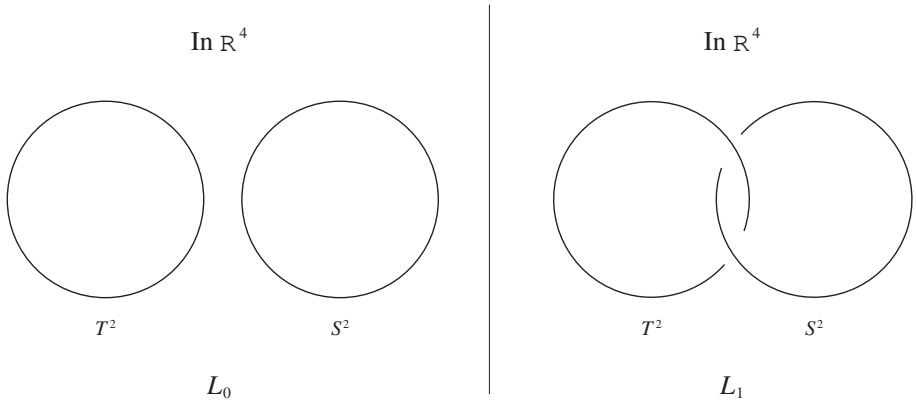

Note that L_0 and L_1 are the name used only in this article.

It is known that L_0 and L_1 are different. It is proved by using the homology groups or the fundamental group of $\mathbb{R}^4 - S^2$ or by using the homology groups of $\mathbb{R}^4 - T^2$.

By an analogy to the previous case 'S^1 and S^2 in $\mathbb{R}^4$', we can guess L_1 is changed into L_0 by the following procedure. Note that B^n is the n-dimensional ball ($n \in \mathbb{N}$). Indeed it is true.

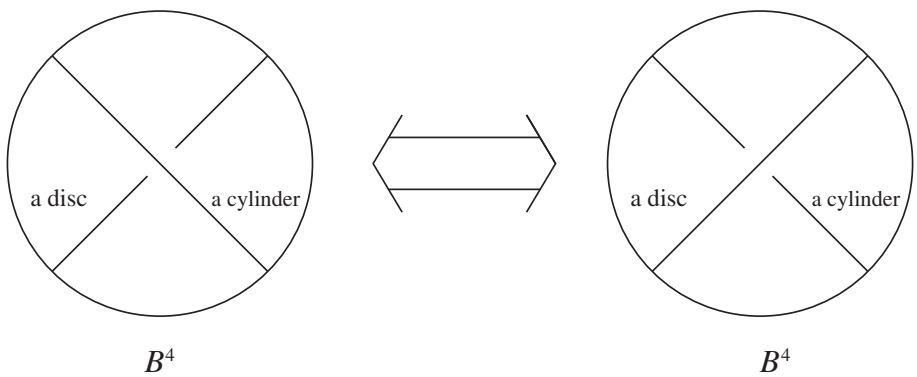

$S^2 \cap B^4 =$ a disc
$T^2 \cap B^4 =$ a cylinder

This procedure is also called ribbon-move. We say that L_1 (resp. L_0) is changed into L_0 (resp. L_1) by a ribbon-move. We will write a more rigorous figure of ribbon-moves in a few pages.

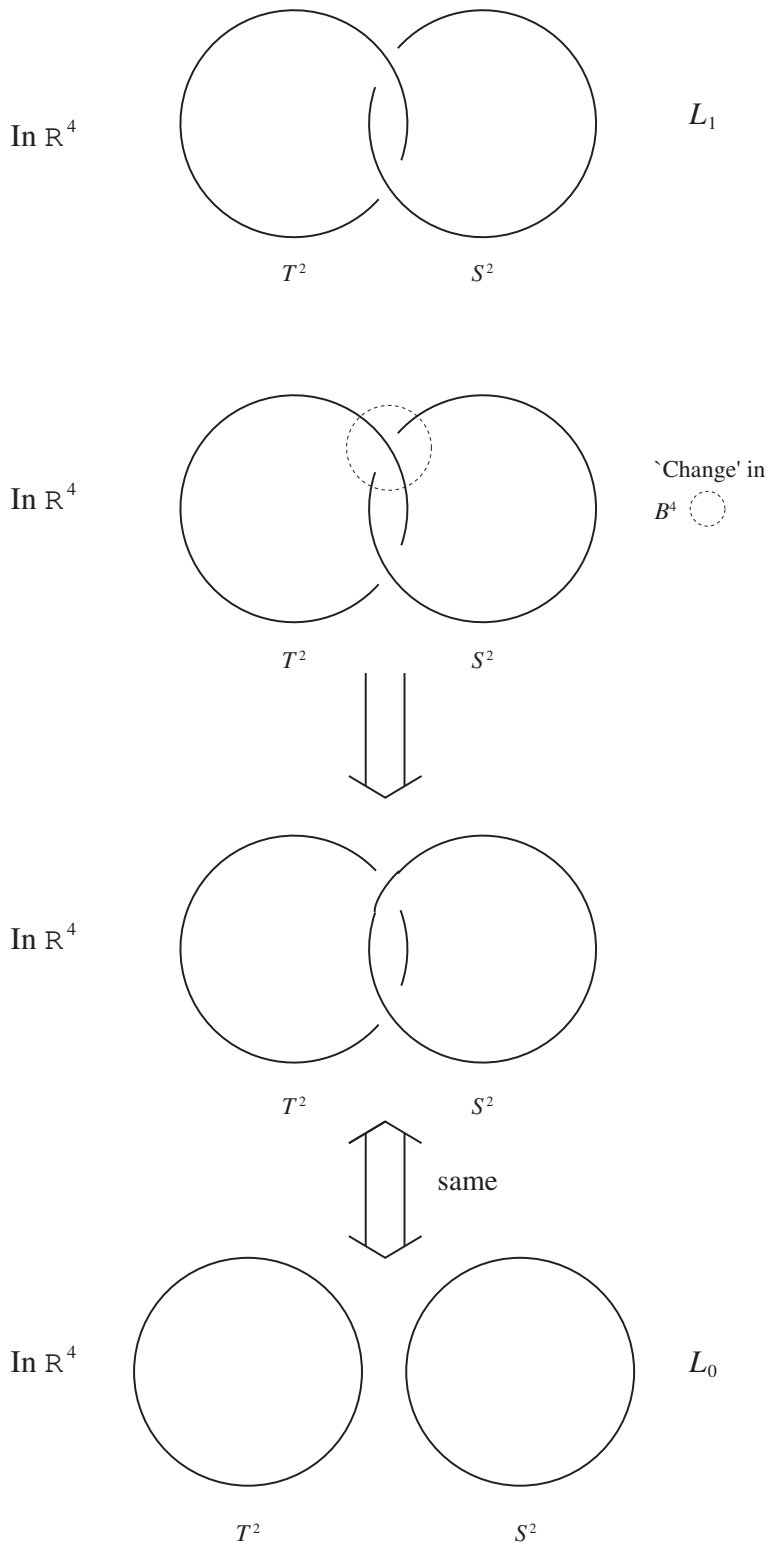
In $\mathbb{R}^4$
L_1
T^2
S^2
In $\mathbb{R}^4$
`Change' in
B^4
T^2
S^2
In $\mathbb{R}^4$
T^2
S^2
same
In $\mathbb{R}^4$
L_0
T^2
S^2

Note to the advanced readers: We draw a little more explicit figure of the ribbon-move. We will write the definition of ribbon-moves rigorously in a few pages by using the following figures.

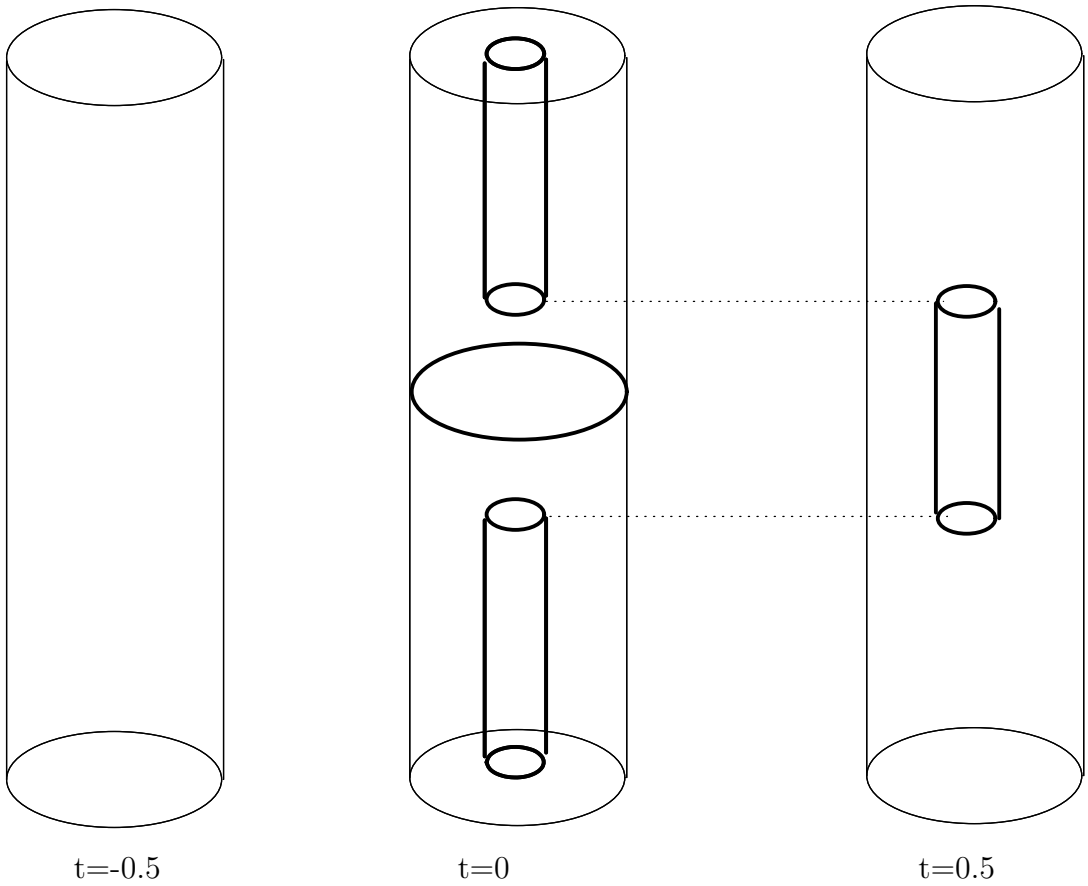

Figure 1.1

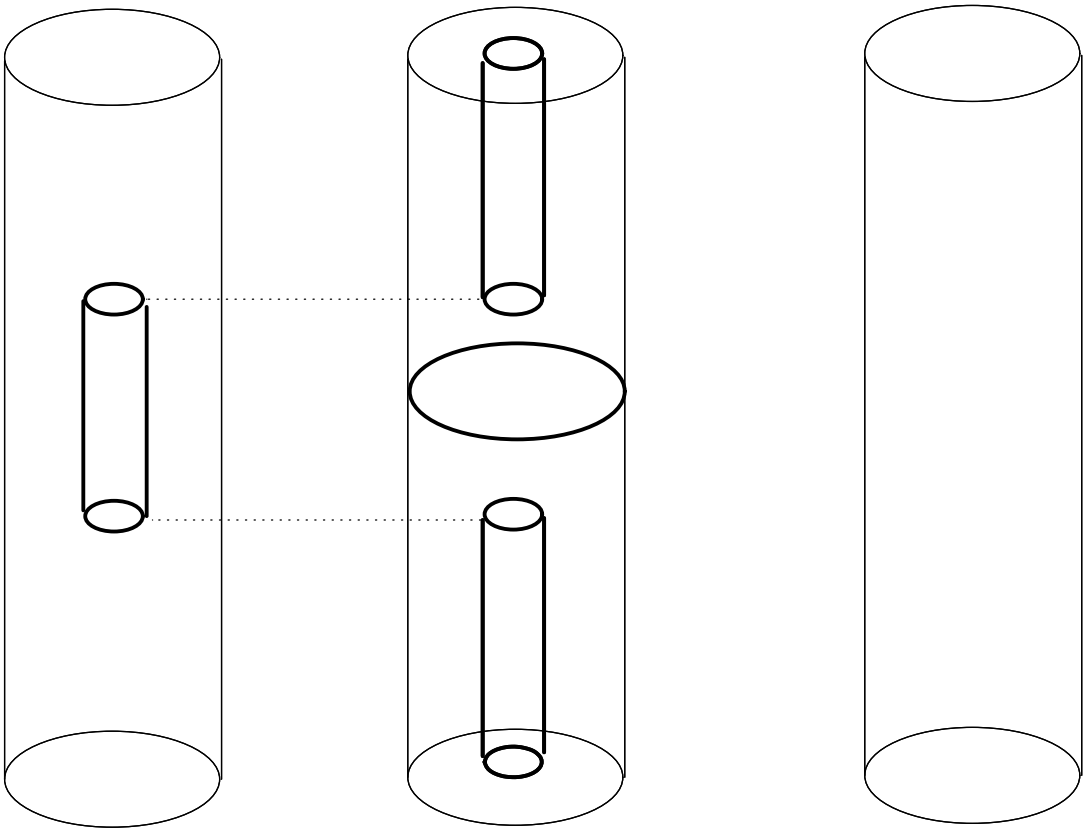

Figure 1.2

Note to the advanced readers: We write the definition of the ribbon-move by using the figures in the previous two pages. We use some mathematical terms. Please check the literature.

Let K_1 and K_2 be 2-links or 2-dimensional closed submanifolds in $\mathbb{R}^4$. We say that K_2 is obtained from K_1 by one *ribbon-move* if there is a 4-ball B embedded in $\mathbb{R}^4$ with the following properties.

(1) K_1 coincides with K_2 in $\mathbb{R}^4 -$ (the interior of B). This identity map from $K_1 -$ (the interior of B) to $K_2 -$ (the interior of B) is orientation preserving.

(2) $B \cap K_1$ is drawn as shown in Figure 1.1. $B \cap K_2$ is drawn as shown in Figure 1.2.

We regard B as (a closed 2-disc)$\times[0,1] \times \{t| -1 \leqq t \leqq 1\}$. We suppose $B_t =$(a closed 2-disc)$\times[0,1] \times \{t\}$. Then $B = \cup B_t$. In Figure 1.1 and 1.2, we draw $B_{-0.5}, B_0, B_{0.5}$ in B. We draw K_1 and K_2 by the bold line. The fine line denotes ∂B_t.

$B \cap K_1$ (resp. $B \cap K_2$) is diffeomorphic to $D^2 \amalg (S^1 \times [0,1])$, where $\amalg$ denotes the disjoint union.

$B \cap K_1$ has the following properties: $B_t \cap K_1$ is empty for $-1 \leqq t < 0$ and $0.5 < t \leqq 1$. $B_0 \cap K_1$ is diffeomorphic to $D^2 \amalg (S^1 \times [0, 0.3]) \amalg (S^1 \times [0.7, 1])$. $B_{0.5} \cap K_1$ is diffeomorphic to $(S^1 \times [0.3, 0.7])$. $B_t \cap K_1$ is diffeomorphic to $S^1 \amalg S^1$ for $0 < t < 0.5$. (Here, we draw $S^1 \times [0,1]$ to have the corner in B_0 and in $B_{0.5}$. Strictly to say, $B \cap K_1$ in B is a smooth embedding that is obtained by making the corner smooth.)

$B \cap K_2$ has the following properties: $B_t \cap K_2$ is empty for $-1 \leqq t < -0.5$ and $0 < t \leqq 1$. $B_0 \cap K_2$ is diffeomorphic to $D^2 \amalg (S^1 \times [0, 0.3]) \amalg (S^1 \times [0.7, 1])$. $B_{-0.5} \cap K_2$ is diffeomorphic to $(S^1 \times [0.3, 0.7])$. $B_t \cap K_2$ is diffeomorphic to $S^1 \amalg S^1$ for $-0.5 < t < 0$. (Here, we draw $S^1 \times [0,1]$ to have the corner in B_0 and in $B_{-0.5}$. Strictly to say, $B \cap K_1$ in B is a smooth embedding that is obtained by making the corner smooth.)

In Figure 1.1 (resp. 1.2) there are an oriented cylinder $S^1 \times [0,1]$ and an oriented disc D^2 as we stated above. We do not make any assumption about the orientation of the cylinder and the disc. The orientation of $B \cap K_1$ (resp. $B \cap K_2$) coincides with that of the cylinder and that of the disc.

If K_1 is obtained from K_2 by one ribbon-move, then we also say that K_2 is obtained from K_1 by one *ribbon-move*.

Two 2-links K_1 and K_2 are said to be *ribbon-move-equivalent* if there are 2-links $K_1 = \bar{K}_1, \bar{K}_2, ..., \bar{K}_{r-1}, \bar{K}_r = K_2$ (r, p are natural numbers and $p \geq 2$)such that $\bar{K}_i$ is obtained from $\bar{K}_{i-1}$ ($1 < i \leqq r$) by one ribbon-move.

Note to the advanced readers: The ribbon-moves on $T^2 \amalg S^2$ in S^4 can change the alinking number of the $T^2 \amalg S^2$ in S^4. See the following papers for the alinking number.

E. Ogasa: 'Ribbon-moves of 2-links preserve the μ-invariant of 2-links', Journal of knot theory and its ramifications, 13 (2004) 669–687.

N. Sato: 'Cobordisms of semi-boundary links' Topology and its application, 18, (1984) 225-234.

We have shown ribbon-moves on 'S^2 and T^2 in $\mathbb{R}^4$'. Next we introduce ribbon-moves on 2-dimensional knots in $\mathbb{R}^4$. It can be defined as in the same manner in the case of 'S^2 and T^2 in $\mathbb{R}^4$'.

In B^4 in $\mathbb{R}^4$, the intersection of the 2-knot and B^4 is a set of a disc and a cylinder such that there is no common point between the disc and the cylinder.

A sequence of a finite number of ribbon-moves on a 2-knot can make a nontrivial knots as shown below.

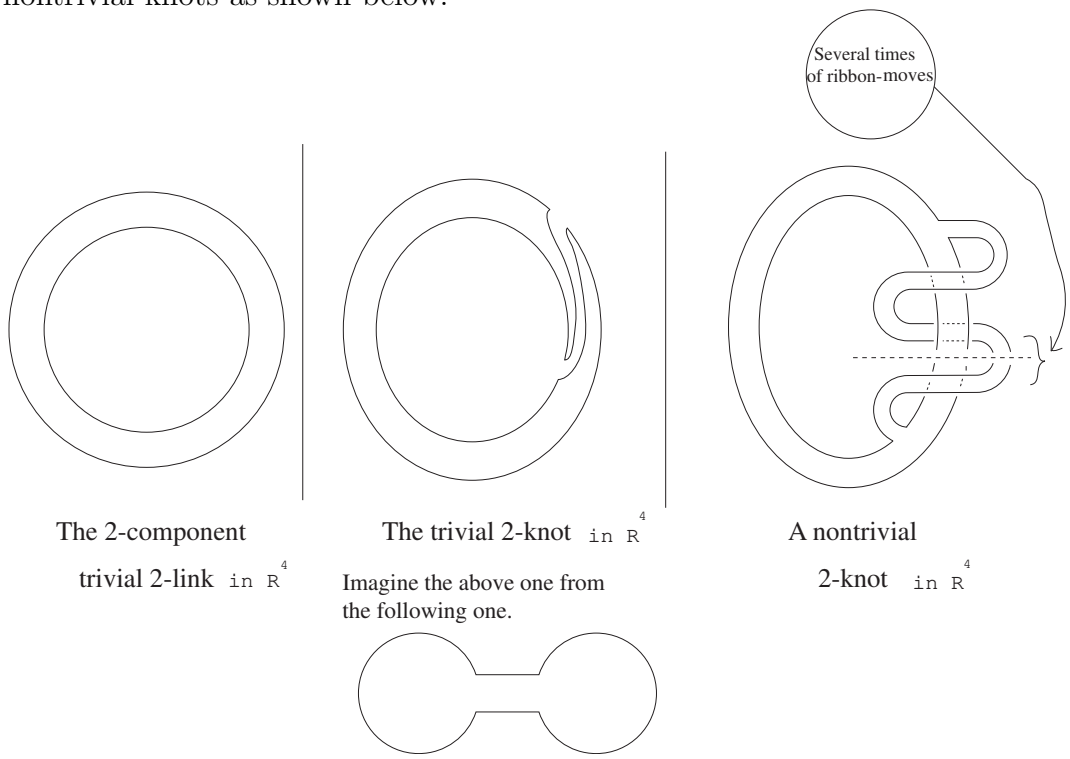

It is known that we have the following:

The Hopf link is made into the 2-component 1-dimensional trivial link by one time of crossing-change.

Any m-component 1-dimensional link is made into the trivial m-component 1-dimensional link by a sequence of a finite number of crossing-changes, where m is any natural number.

In particular, any 1-dimensional knot is made into the trivial 1-dimensional knot by a sequence of a finite number of crossing-changes.

By the way, we have the following.

Let L_0 and L_1 be the sets of T^2 and S^2 in $\mathbb{R}^4$ as defined earlier.

L_0 is made into L_1 by one time of ribbon-move.

We can make countably infinitely many nontrivial 2-knots in $\mathbb{R}^4$ from the trivial 2-knot in $\mathbb{R}^4$ by a sequence of a finite number of ribbon-moves. An example is drawn on the left page.

It is well known that the spun knot of any 1-knot is ribbon-move-equivalent to the trivial 2-knot. Recall that a 1-knot is in $\mathbb{R}^3$ and that the spun knot of a 1-knot is a 2-knot in $\mathbb{R}^4$.

Well, it is natural to ask the following question.

Question: Is any 2-dimensional knot in $\mathbb{R}^4$ ribbon-move-equivalent to the trivial 2-dimensional knot in $\mathbb{R}^4$?

Note: If K is obtained from K' by a sequence of a finite number of ribbon-moves, then we say that K is ribbon-move-equivalent to K'.

We proved that not all 2-knots are ribbon-move-equivalent to the trivial 2-knot.

The idea of the proof: Ribbon moves on 2-knots preserve the μ-invariant of 2-knots, the $\widetilde{\eta}$-invariants of 2-knots. Furthermore they preserve some partial information of the homology groups with intersection products, a kind of intersections of submanifolds, and torsion linking pairings of the infinite cyclic covering spaces of the complements of 2-knots. See the author's papers for detailed explanations.

E. Ogasa: 'Ribbon-moves of 2-links preserve the μ-invariant of 2-links', Journal of knot theory and its ramifications, 13 (2004), no. 5, 669–687

E. Ogasa: 'Ribbon-moves of 2-knots: The Farber-Levine pairing and the Atiyah-Pathodi-Singer-Casson-Gordon-Ruberman $\tilde{\eta}$ invariant of 2-knots', Journal of Knot Theory and Its Ramifications, Vol. 16, No. 5 (2007) 523-543

E. Ogasa:'A new obstruction for ribbon-moves on 2-knots: 2-knots fibred by the punctured 3-torus and 2-knots bounded by the Poicaré sphere', arXiv:1003.2473math.GT

We proved in the author's paper (2004) that the 5-twist spun knot of the trefoil knot is not ribbon-move-equivalent to the trivial 2-knot. Recall that the 5-twist spun knot of the trefoil knot is a 2-dimensional knot in $\mathbb{R}^4$.

Furthermore we proved that there are countably infinitely many non-trivial 2-knots which are not ribbon-move-equivalent to the trivial knot.

Let K and K' be arbitrary 2-knots. Then is K ribbon-move-equivalent to K'?

That is, classify 2-knots by ribbon-move-equivalence.

It is an open problem.

Please solve this.

§ 4.2. (p, q)-pass-moves on n-dimensional knots $(p + q = n + 1)$

We introduce another local move of high dimensional knots, the (p, q)-pass-move of n-dimensional knots $(p+q = n+1)$, after we introduce products of figures.

Let A be in $\mathbb{R}^n$. Let B be in $\mathbb{R}^m$.

Define $A \times B$ to be

$\{(x_1, ..., x_n, y_1, ..., y_m)|(x_1, ..., x_n)$is in $A.(y_1, ..., y_m)$is in $B\}$ in $\mathbb{R}^{n+m}$.

It is conceptually drawn as follows.

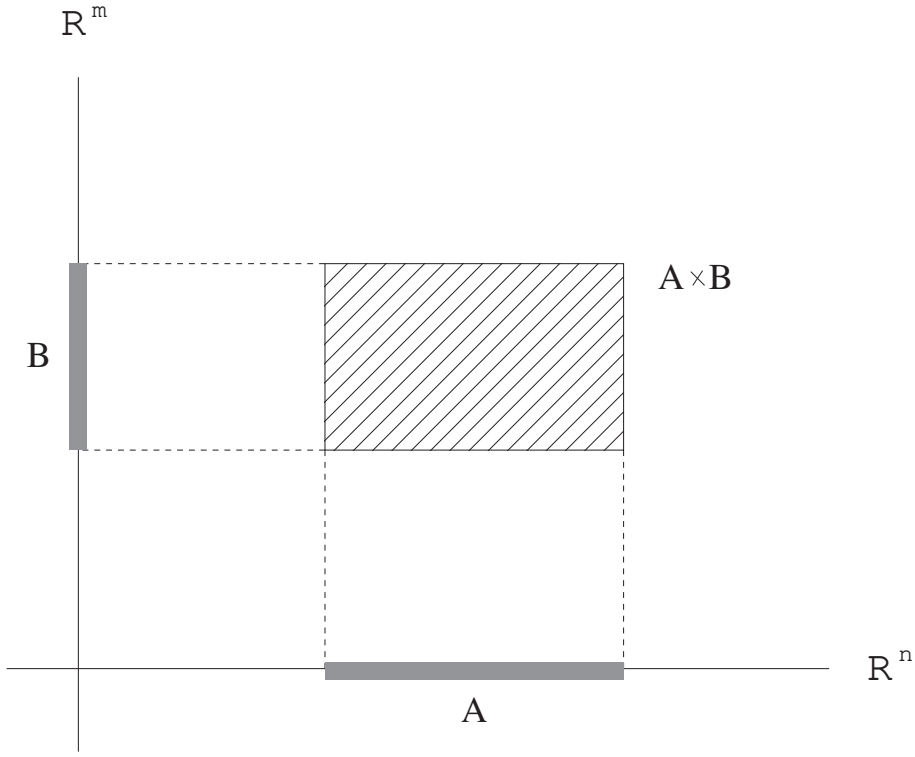

$S^1 \times S^1$ is an example.
S^1 is represented by
$\{(x_1, x_2) | (x_1)^2 + (x_2)^2 = 1\}$ in $\mathbb{R}^2$
$S^1 \times S^1$ is represented by
$\{(x_1, x_2, y_1, y_2) | (x_1)^2 + (x_2)^2 = 1, \quad (y_1)^2 + (y_2)^2 = 1\}$ in $\mathbb{R}^4$.
Note: In this way, $S^1 \times S^1$ is defined in $\mathbb{R}^4$ but it can be embedded in $\mathbb{R}^3$.

$S^1 \times S^{n-1}$ $(n \geqq 3)$ is defined in the similar fashion.

Note to the advanced readers: We want to talk about product sets and product manifolds. In fact they can be defined without using $\mathbb{R}^l$ which includes figures.

We define (p, q)-pass-moves on n-knots $(p + q = n + 1)$.

Take an $(n + 2)$-ball B^{n+2} trivially embedded in $\mathbb{R}^{n+2}$.

Regard B^{n+2} as $B^1 \times B^p \times B^q$. Note that B^l is $\{(x_1, ..., x_l)|(x_1)^2 + ... + (x_l)^2 \leqq 1\}$ for any natural number l. In particular, that B^1 is $[-1, 1] = \{x| - 1 \leqq x \leqq 1\}$.

Take a smaller p-ball D^p in B^p and suppose that D^p is $\{(x_1, ..., x_p)|(x_1)^2 + ... + (x_p)^2 \leqq \frac{1}{4}\}$.

Take a smaller q-ball D^q in B^q as well.

Take $D^p \times B^q$ and $B^p \times D^q$ in B^{n+2} as shown in X_+ (resp. X_-) as follows. Imagine! Note that $D^p \times B^q$ and $B^p \times D^q$ do not touch each other. Imagine!

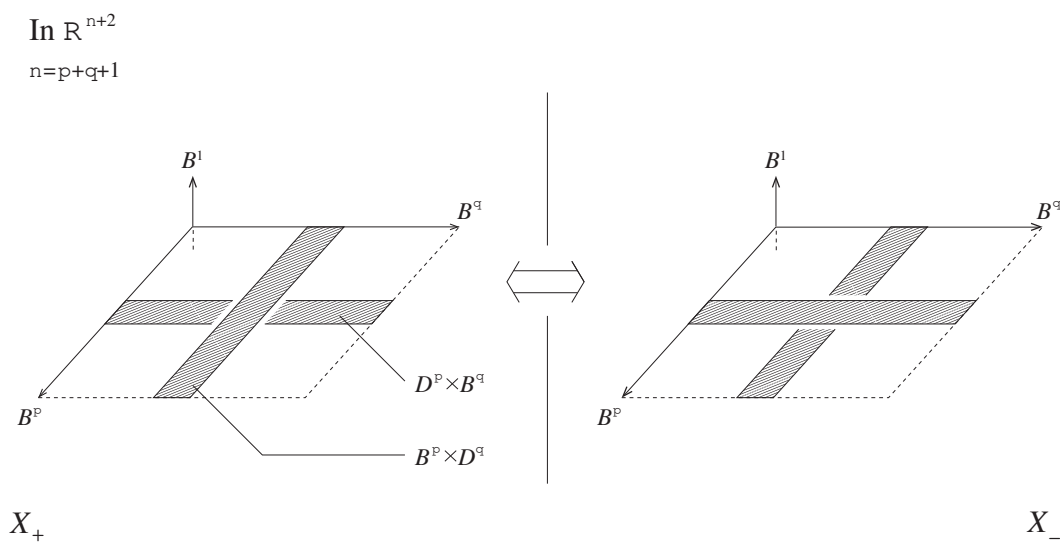

X_+ (resp. X_-) is $B^1 \times B^p \times B^q$.

$D^p \times B^q$ is embedded in $\{0\} \times B^p \times B^q$ trivially.

$(B^p \times D^q) \cap$ (the boundary of X_+) is embedded in $\{0\} \times B^p \times B^q$ trivially.
$(B^p \times D^q) \cap$ (the boundary of X_-) is embedded in $\{0\} \times B^p \times B^q$ trivially.
$(B^p \times D^q) \cap$ (the interior of X_+) is embedded in $\{x > 0\} \times B^p \times B^q$ trivially.
$(B^p \times D^q) \cap$ (the interior of X_-) is embedded in $\{x < 0\} \times B^p \times B^q$ trivially.

Note to beginners: 'embedding trivially' is mathematically defined. However, if you currently associate the word 'embedding trivially' with how it is used in daily life, please continue to do so.

Let S^{p-1} be the boundary of D^p.

Hence $S^{p-1} \times B^q$ is included in the boundary of $D^p \times B^q$.

$B^p \times S^{q-1}$ is included in the boundary of $B^p \times D^q$ as well.

Take $S^{p-1} \times B^q$ and $B^p \times S^{q-1}$ in B^{n+2} as shown in Y_+ (resp. Y_-) as follows. Imagine again!

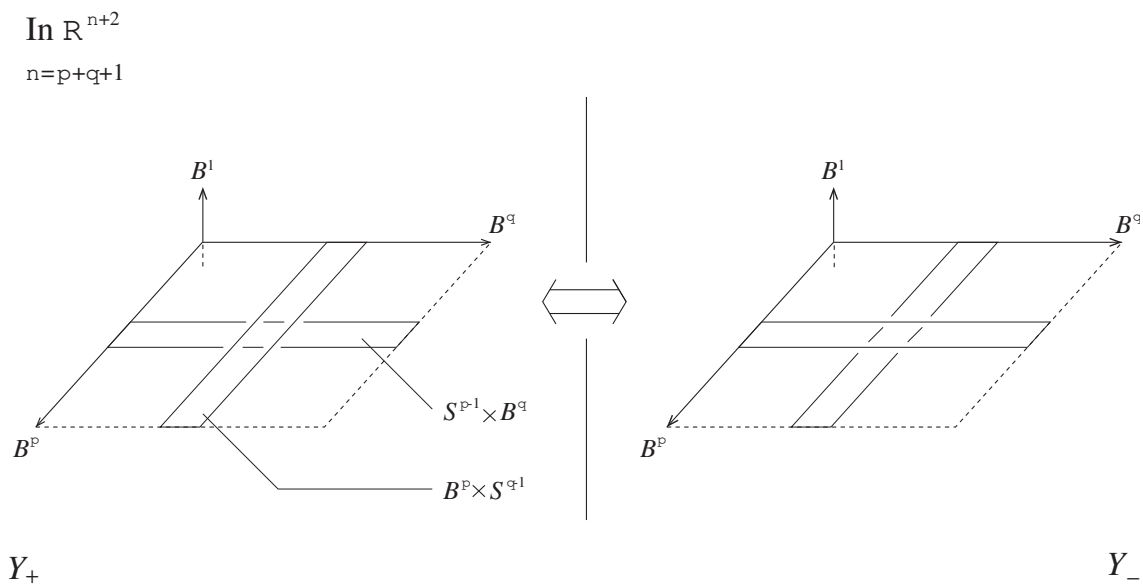

Let K_+ K_- be n-dimensional knots in $\mathbb{R}^{n+2}$. Suppose that K_+ and K_- differ only in the above B^{n+2} and that the intersection of K_+ (resp. K_-) and B^{n+2} is Y_+ (resp. Y_-).

Then we say that K_- (resp. K_+) is obtained from K_+ (resp. K_-) by one (p, q)-pass-move.

Let p (resp. q) be an fixed natural number. Let $p + q = n + 1$.

Could you imagine that a nontrivial n-dimensional knot is obtained from the trivial n-dimensional knot by one (p, q)-pass-move (resp. a sequence of a finite number of (p, q)-pass-moves)?

We explain it from here on.

Note to the advanced readers: See the author's paper for detailed explanations.

E. Ogasa 'Local move identities for the Alexander polynomials of high-dimensional knots and inertia groups', Journal of Knot Theory and Its Ramifications 18, 531-545, 2009.

E. Ogasa 'Intersectional pair of n-knots, local moves of n-knots, and their invariants' Mathematical Research Letters 5, 577-582, 1998.

A little less conceptual figure of (p, q)-pass-move. Note that the position of the boundary of $S^{n-p} \times B^p$ is different from that in the figure in the last page. Don't mind it too much.

Note that both B^n and D^n denote n-balls and that $P \times Q$ is the same as $Q \times P$.

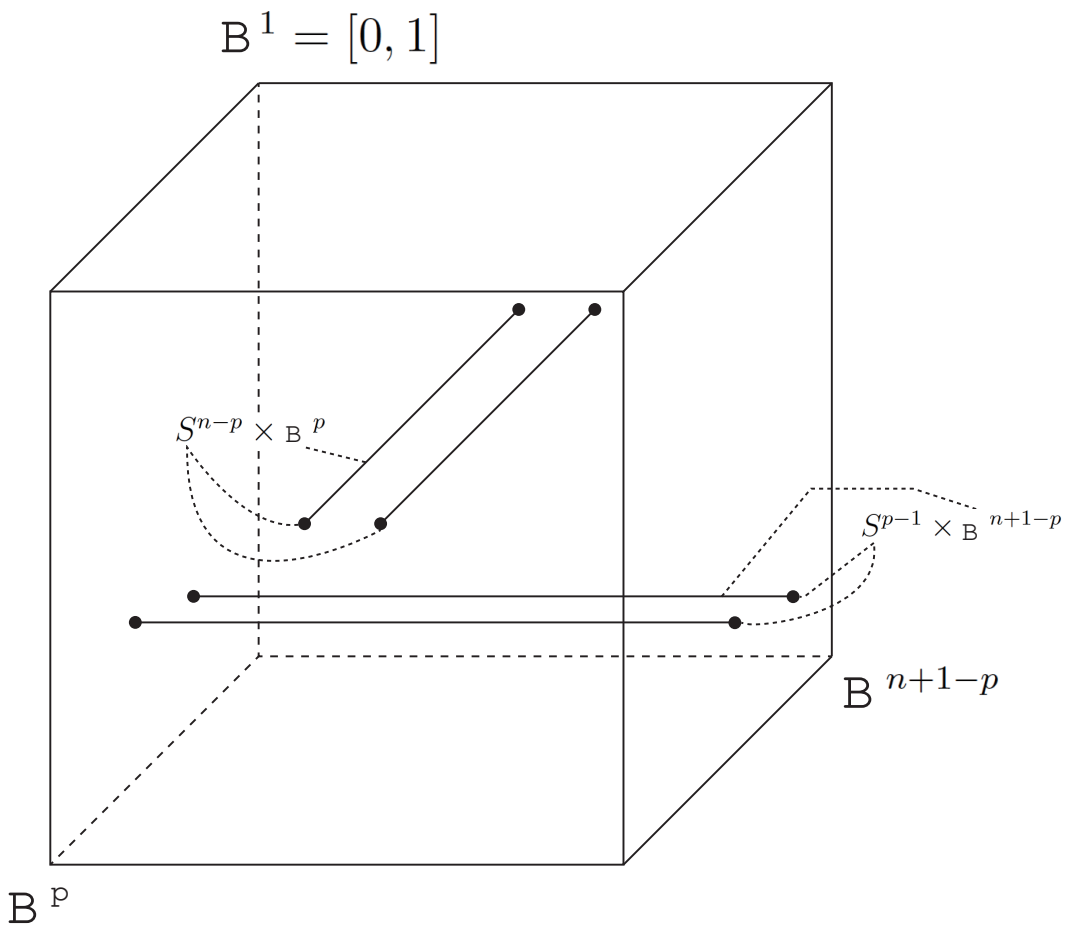

This cube is

an (n+2)-dimensional ball B^{n+2} in R^{n+2}

$B \cap K_+$

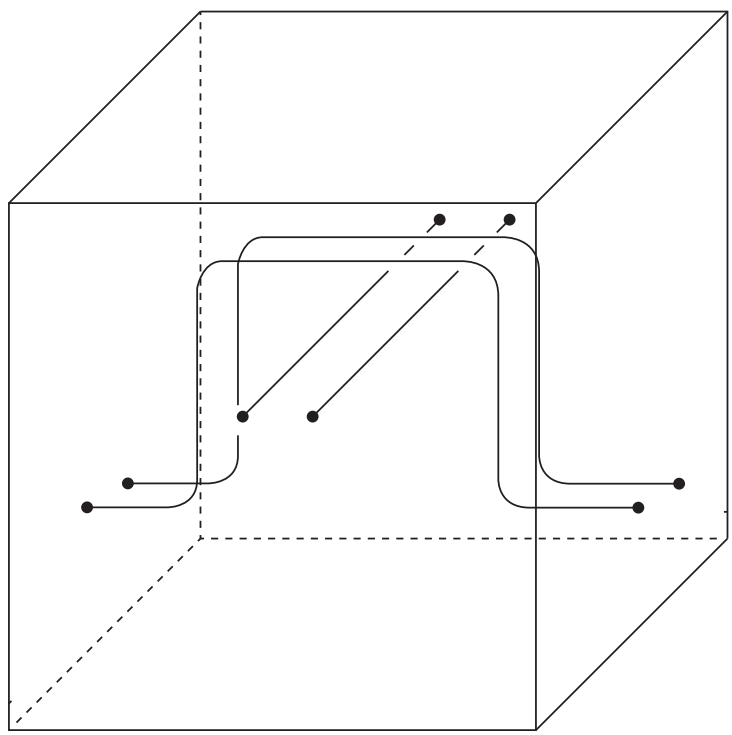

$B \cap K_-$

Could you imagine that a nontrivial n-dimensional knot is obtained from the trivial n-dimensional knot by one (p, q)-pass-move (resp. a sequence of a finite number of (p, q)-pass-moves)?

In order to imagine high dimensional case, it is very often useful to consider a low dimensional case.

Consider the case where $p = q = 1$ and hence $n = 3$.

See the following figure for an illustration of the pass-move for 1-links. Here, we consider not only 1-knot case but also 1-link case. We often abbreviate (1,1)-pass-move to pass-move.

The 1-link is oriented and is represented by the arrow in the following figure.

Each of four arcs in the 3-ball may belong to different components of the 1-link.

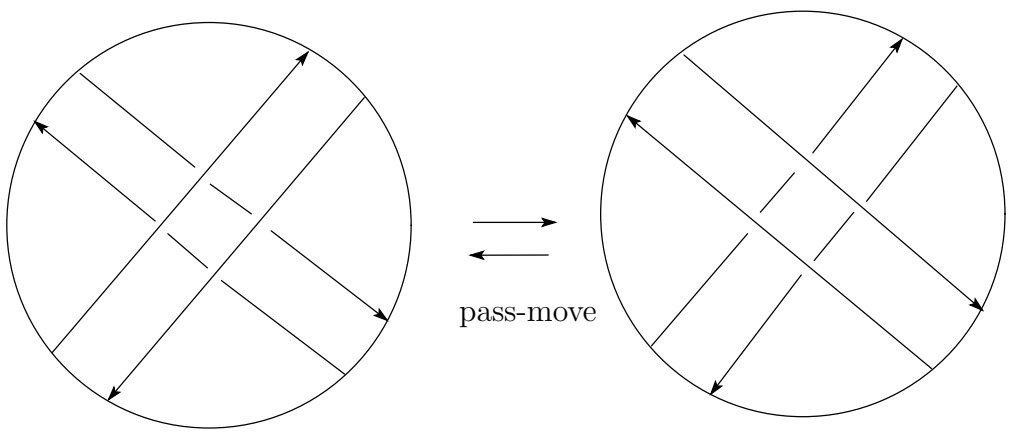

First we change the trivial knot into a nontrivial knot by a pass-move in the following pages. Note that we sometimes abbreviate 1-dimensional knot to 1-knot or knot.

We will generalize this way to high dimensional case.

Regard S^1 as the union of two 1-ball B^1_u and B^1_d. Note that the 1-ball is the segment.

Then $S^1 \times S^1$ is regarded as the union of four parts, $B^1_u \times B^1_u$, $B^1_u \times B^1_d$, $B^1_d \times B^1_u$, and $B^1_d \times B^1_d$.

Remove the interior of $B^1_u \times B^1_u$ from $S^1 \times S^1$, call it F.

F is drawn conceptually as below. We abbreviate $B^\sharp_\star$ to $B_\star$.

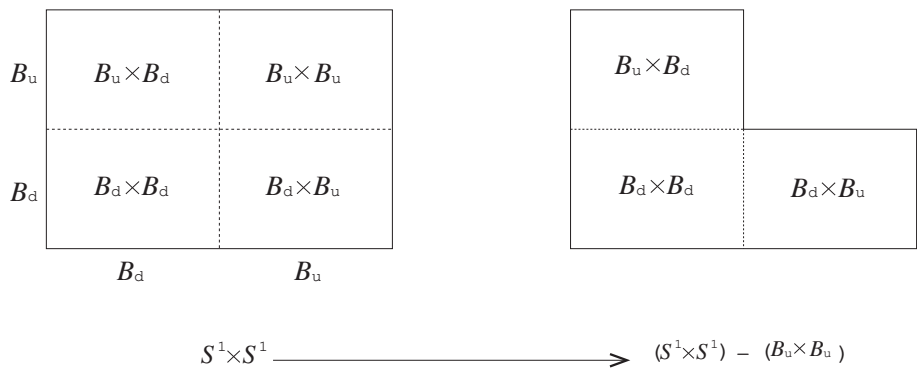

F is drawn explicitly as follows. Note that we can bend the corner of $B^1_u \times B^1_u$ and change it into the 2-dimensional ball. Hence the boundary of F is a single circle.

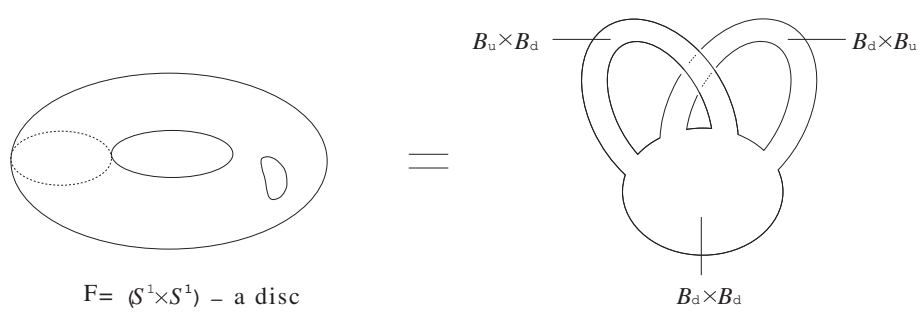

Take F in $\mathbb{R}^3$ as follows.

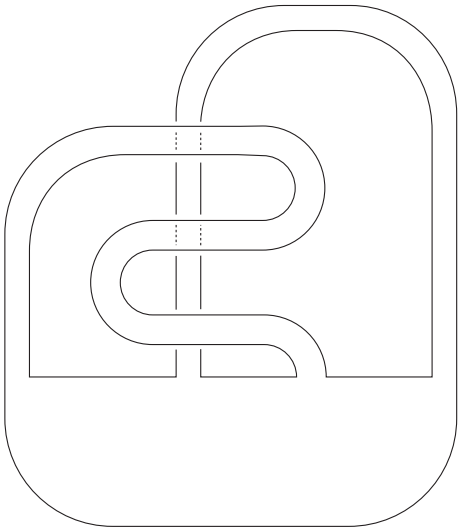

.

.

The boundary of F in $\mathbb{R}^3$ is a 1-knot. Furthermore it is the trivial knot.

Carry out a pass move on this knot in in the following figure.

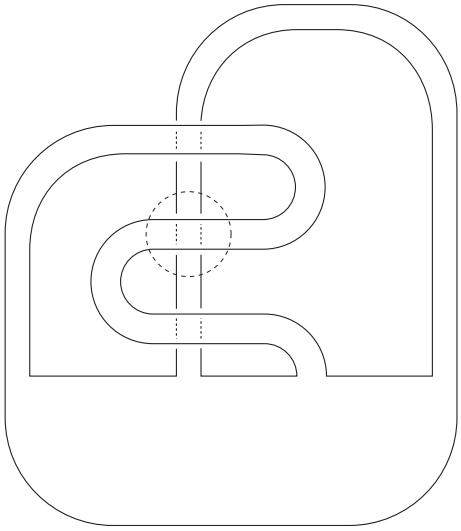

Probably you will feel the resulting knot

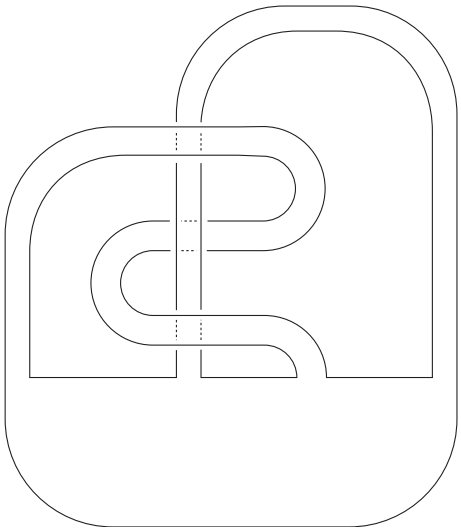

is a nontrivial knot. Yes. It is true. We can prove it by using Seifert matrices and the Alexander polynomial.

It is known that there are countably infinitely many nontrivial knots which are pass-move-equivalent to the trivial knot which bound F (resp. which do not bound F).

Any 1-knot is ribbon-move-equivalent to the trivial knot or the trefoil knot. Furthermore the trivial knot is not pass-move-equivalent to the trefoil knot.

Note to the advanced readers: We have the following.

If the Arf invariant of a 1-knot K is zero (resp. one), then K is ribbon-move-equivalent to the trivial knot (resp. the trefoil knot).

Furthermore we have the following. Let L_1 and L_2 be 1-links. Then L_1 and L_2 are pass-move-equivalent if and only if L_1 and L_2 satisfy one of the following conditions (1) and (2).

(1) Both L_1 and L_2 are proper links, and

$$\mathrm{Arf}(L_1) = \mathrm{Arf}(L_2).$$

(2) Neither L_1 nor L_2 is a proper link, and

$$\mathrm{lk}(K_{1j}, L_1 - K_{1j}) \equiv \mathrm{lk}(K_{2j}, L_2 - K_{2j}) \ \mathrm{mod} 2 \ \ for \ \ all \ \ j$$

.

Here, $\mathrm{lk}(K_{aj}, L_a - K_{aj})$ is the sum of all linking number $\mathrm{lk}(K_{aj}, K_{ai})$, where $i \neq j$. Here, lk is the linking number.

See Kauffman 'On knots' Princeton University Press. for detailed explanations.

Next consider the case where $p = 1$ $q = 2$, and $n = 4$.

One (1,2)-pass-move is two ribbon-moves.
Can you imagine this?

Furthermore in fact if a 2-knot K is obtained from a 2-knot K' by one ribbon-move, then K' is obtained from K by one (1,2)-pass-move. The proof is written in the author's paper (2004) on P524.

Next we change the trivial n-dimensional knot into a nontrivial n-dimensional knot by a (p,q)-pass-move $(p+q=n+1)$. Recall that n-knots are in $\mathbb{R}^{n+2}$

Regard S^p as the union of p-ball B^p_u and B^p_d. Do S^q as well.

Then $S^p \times S^q$ is regarded as the union of four parts, $B^p_u \times B^q_u$, $B^p_u \times B^q_d$, $B^p_d \times B^q_u$, and $B^p_d \times B^q_d$.

Remove the interior of $B^p_u \times B^q_u$ from $S^p \times S^q$, call it F.

F is drawn conceptually as below. We abbreviate $B^\sharp_\star$ to $B_\star$.

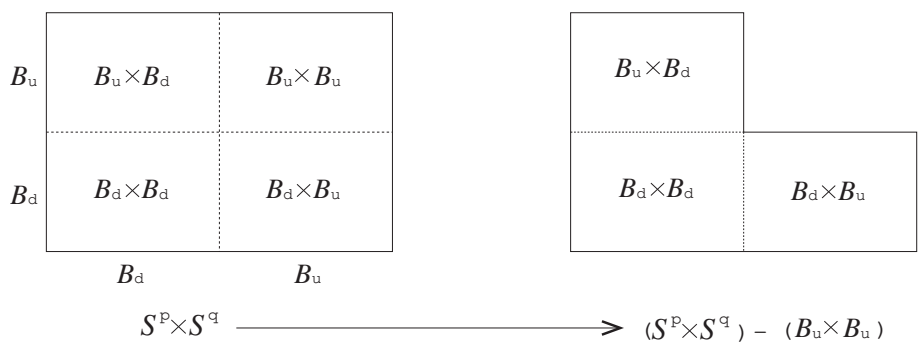

F is drawn conceptually in another way as below. Note that we can bend the corner of $B_u^p \times B_u^q$ and change it into the $(p+q)$-dimensional ball. Hence the boundary of F is S^n.

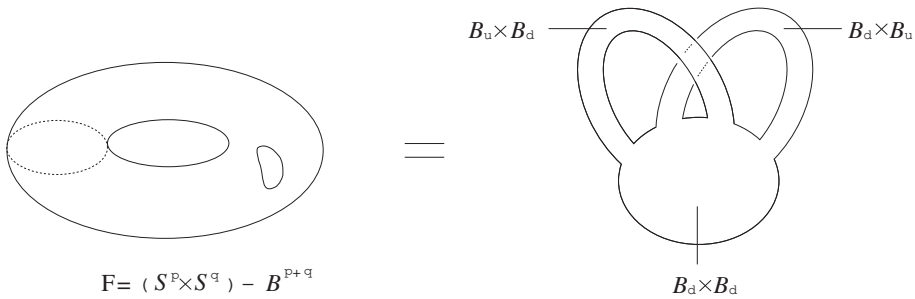

Note to the advanced readers: This figure is an example of handle decomposition of manifolds. See textbooks on differential topology and surgery theory for detailed explanations.

Take F in $\mathbb{R}^{n+2}$ as follows.

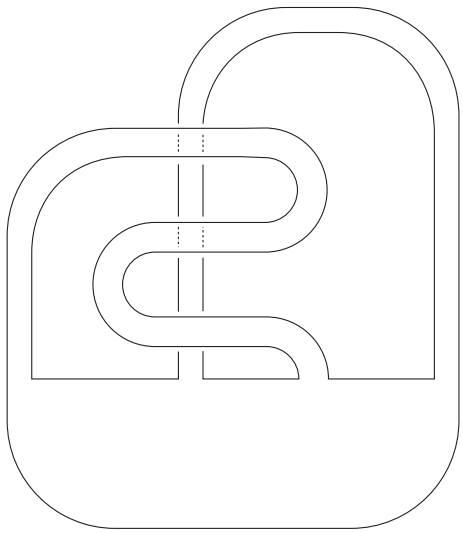

.

The boundary of F in $\mathbb{R}^{n+2}$ is an n-knot. Furthermore it is the trivial n-knot. It is drawn very conceptually.

Carry out a (p, q)-pass-move on this n-knot in in the following figure.

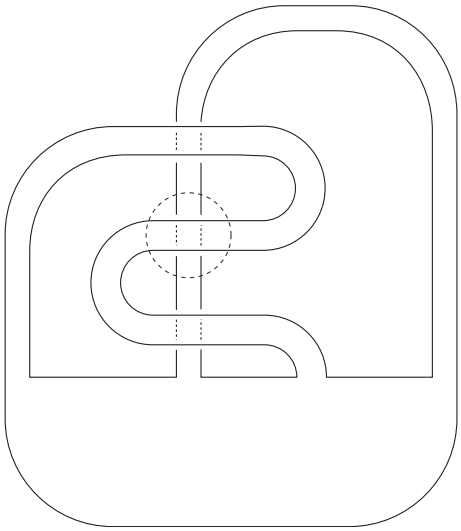

It is known that the resulting n-knot

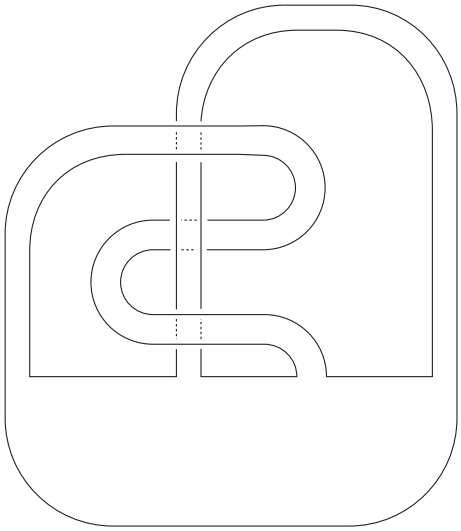

is a nontrivial n-knot.

We can prove this fact by using Seifert matrices and the Alexander polynomial. In the proof, we use the fact that S^p and S^q can be 'linked' in $\mathbb{R}^{p+q+1}$.

We use the following facts to prove it: S^q and S^p are included in F as shown in the following figure. S^q and S^p are 'linked' in S^{p+q+1}. Imagine!

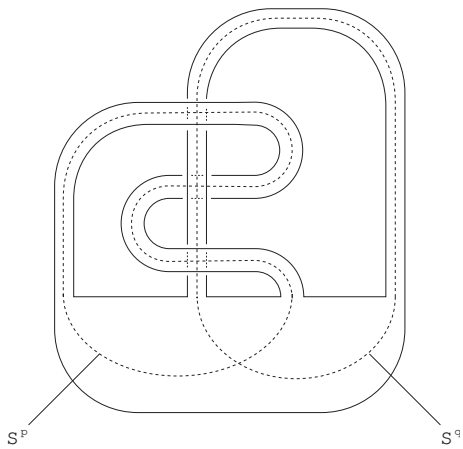

It is known that there are countably infinitely many nontrivial n-dimensional knots which are pass-move-equivalent to the trivial n-knot which bound F (resp. which do not bound F).

It is not solved that what kind of high dimensional knots are (p, q)-pass-move-equivalent to the trivial knot in both cases where p and q are fixed and where p and q run.

It is also not solved to classify n-knots by (p, q)-pass-move-equivalence.

We found some examples of nontrivial n-knots which are not (p, q)-pass-move-equivalent to the trivial knot.

We found some relations between some invariants of high dimensional knots and (p, q)-pass-moves.

We found an application of (p, q)-pass-moves to the intersection of submanifolds, which is a kind of figure, in S^n.

Kauffman and the author found some relation between (p, q)-pass-moves and knot products.

There are many other exciting open problems on these local moves. Please try.

See the following papers for detailed explanations.

L. H. Kauffman and E. Ogasa 'Local moves on knots and products of knots' arXiv:1210.4667 mathGT

and the author's papers in a few pages back, which are [32, 39] in References.

Appendix Twist-moves on $(2m+1)$-dimensional knots and cross-ring-moves on 2-knots

We introduce another local move on high dimensional knots. It is called twist-move.

We define twist-move for $(2m+1)$-dimensional knots in $\mathbb{R}^{2m+3}$.

Take a $(2m+3)$-ball B^{2m+3} trivially embedded in $\mathbb{R}^{2m+3}$.

Regard B^{2m+3} as $B^1 \times B^{m+1} \times B^{m+1}$.

Take $B^{m+1} \times D^{m+1}$ trivially embedded in B^{2m+3} as follows. Here, D^{m+1}, which is defined earlier, is a smaller ball than B^{m+1} . D^{m+1} is embedded in B^{m+1} . It is drawn very conceptually.

In $\mathbb{R}^{2m+3}$

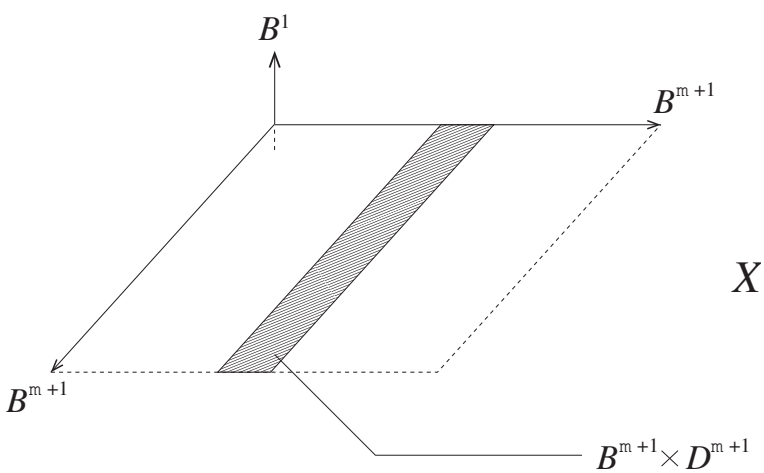

This embedding of $B^{m+1} \times D^{m+1}$ is called X.

Take another embedding of $B^{m+1} \times D^{m+1}$ in B^{2m+3} as follows.

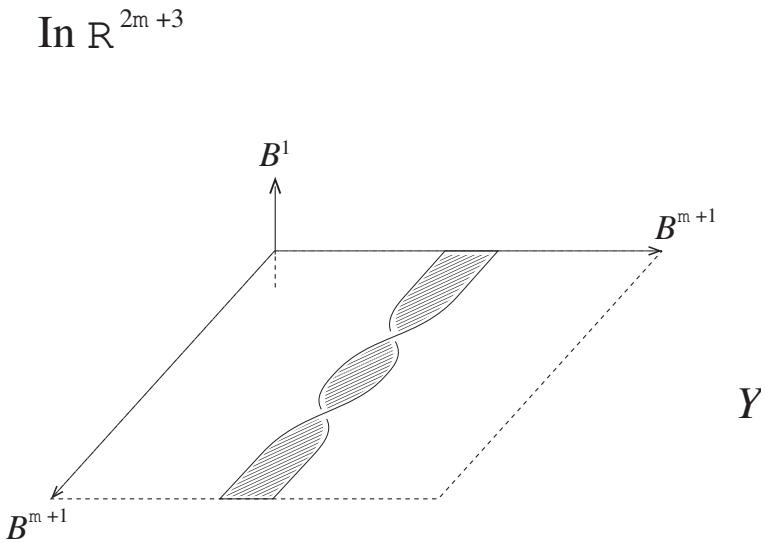

Let this embedding be called Y. If we take X and Y in B^{2m+3} together, the intersection of X and the boundary of B^{2m+3} coincides with the intersection of Y and the boundary of B^{2m+3} and the intersection of X and Y is included in the boundary of B^{2m+3}. The union of X and Y is called Z.

Note the following difference: In the case of (p, q)-pass-moves, X_+, X_-, Y_+, Y_- are $B^1 \times B^p \times B^q$. Here, X and Y are $B^{m+1} \times D^{m+1}$ in B^{2m+3} not $B^{2m+3} = B^1 \times B^{m+1} \times B^{m+1}$.

The reason of this difference is just because of the convenience of the explanation.

In the following figure Z is twisted once in the following meaning. $B^{m+1} \times \{c\}$ in X and that in Y meet at each boundary and make an $(m+1)$-sphere S^{m+1} as follows, where $\{c\}$ is the center of D^{m+1}. This S^{m+1} is, of course, included in Z. We can push off S^{m+1} into the normal direction of Z in $\mathbb{R}^{2m+3}$.

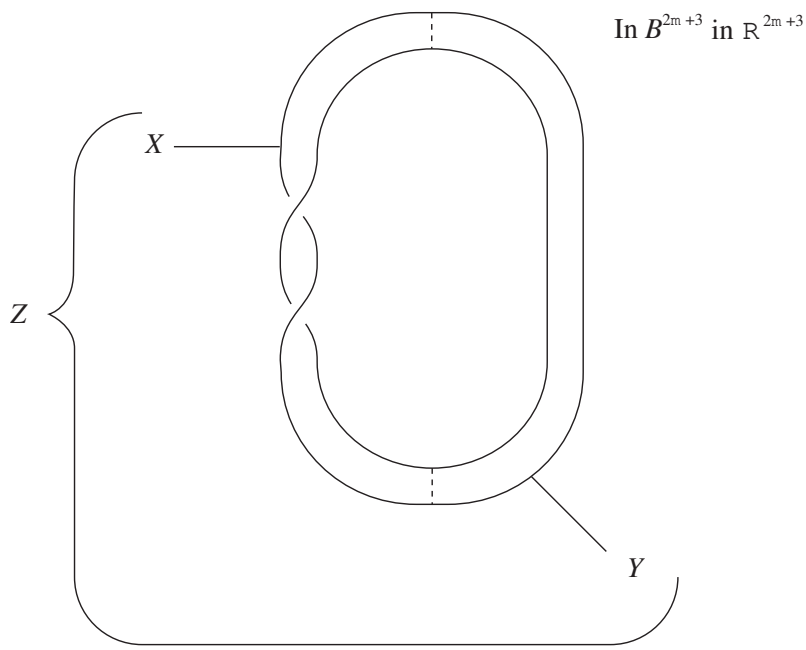

Mathematically speaking, we have the following. Z is the total space of the D^{m+1}-bundle over S^{m+1} associated with the tangent bundle of S^{m+1}. Z is a codimension one smooth submanifold of $\mathbb{R}^{2m+3}$. Z has the trivial normal bundle. Hence we can push off S^{m+1}.

The resulting $(m+1)$-dimensional sphere by pushing off is called $\widetilde{S^{m+1}}$.

We suppose that S^{m+1} and $\widetilde{S^{m+1}}$ satisfy the following condition: S^{m+1} bounds an embedded $(m+2)$-dimensional disc and the intersection of $\widetilde{S^{m+1}}$ and the $(m+2)$-dimensional disc is a single point.

If you know 'Seifert pairing' and 'handle decomposition', the explanation will become much clearer. See the author's paper (2009) in a few pages back, which is [39] in References. for detail.

For now, consider the $2m+1=1$ case as shown in the following two pages and imagine the higher dimensional case.

The boundary of D^{m+1} is an m-sphere S^m. Therefore, $B^{m+1} \times S^m$ is included in the boundary of $B^{m+1} \times D^{m+1}$. This $B^{m+1} \times S^m$ in the boundary of X (resp. Y) is called X' (resp. Y').

Let K_+ and K_- be $(2m+1)$-dimensional knots in $\mathbb{R}^{2m+3}$. Suppose that K_+ and K_- differ only in B^{2m+3} and that the intersection of K_+ (resp. K_-) and B^{2m+3} is X' (resp. Y'). Then we say that K_+ (resp. K_-) is obtained from K_- (resp. K_+) by one twist-move.

If K_+ (resp. K_-) is obtained from K_- (resp. K_+) by a sequence of a finite number of twist-moves, then we say that K_+ and K_- are twist-move-equivalent.

Note: K_+ and K_- are sometimes diffeomorphic in some cases. They are homeomorphic but not diffeomorphic in some cases. They are not homeomorphic in other cases.

Consider twist-moves in the $2m + 1 = 1$ case, i.e., twist-moves on 1-knots. In this case the figure is a real one.

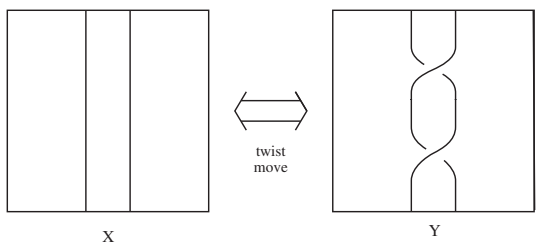

The union of X and Y is as follows. It is the Hopf link in this case.

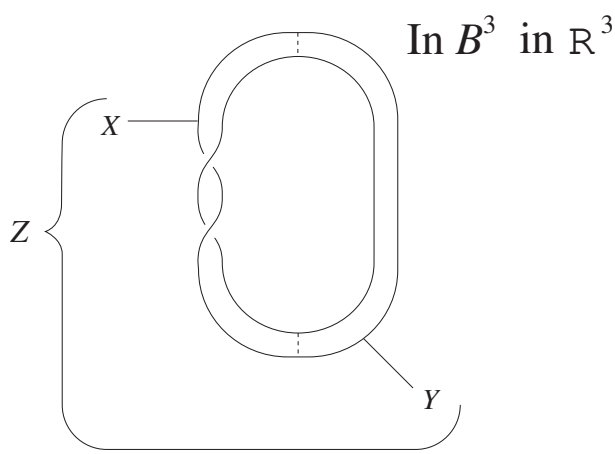

The twist-move is the same as the following move.

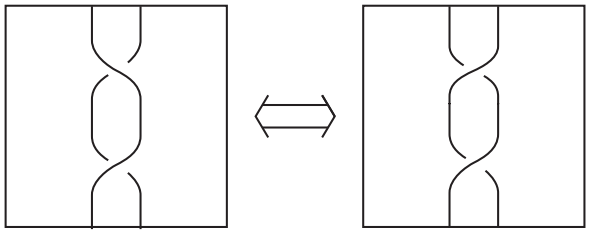

See in the following figure.

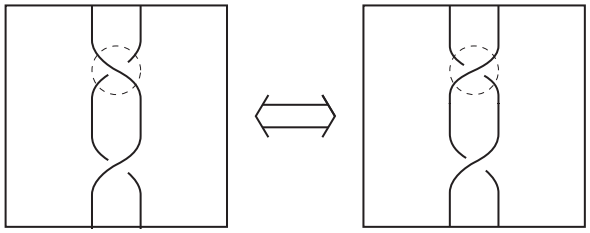

This move is the same as a crossing-change of 1-knots.

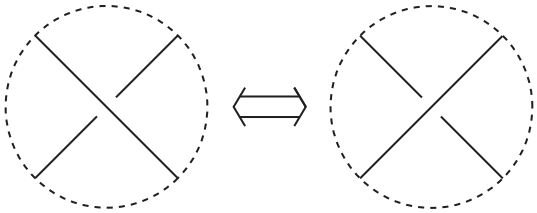

Hence twist-moves on 1-links are the same as crossing-changes of 1-links.

We found some examples of nontrivial n-knots which are not twist-move-equivalent to the trivial knot.

We found some relations between some invariants of high dimensional knots and twist-moves.

Kauffman and the author found some relations between twist-moves and knot products.

There are many other exciting open problems on these local moves. Please try.

See the author's paper (2009) and the joint paper (arXiv:1210.4667) written by Kauffman and the author in a few pages back, which are [39, 46] in References for detailed explanations.

We introduce another local move, 'cross-ring-moves on 2-dimensional knots in $\mathbb{R}^4$', after defining the concept of local moves on n-knots. Needless to say, cross-ring moves are defined not only for 2-knots but also for 2-links in the same fashion. Local moves are defined not only for n-knots but also n-links and submanifolds in the same fashion.

Let K_+ be an n-knot in $\mathbb{R}^{n+2}$. Let A be fixed in $\mathbb{R}^{n+2}$. (Note to the advanced readers: Suppose that A is a compact $(n+2)$-submanifold of R^{n+2}.) Fix P (resp. N) in A. Suppose that K_+ and K_- only differ in A and that the intersection of K_+ (resp. K_-) and A is P (resp. N).

Then we say that K_- is obtained from K_+ by this local move.

Of course this definition is modified in many ways. For example, we can replace 'n-knot' with 'n-dimensional submanifold of $(n+2)$-manifold'. Indeed the local moves introduced in this article are defined not only for n-knots but also for n-dimensional submanifolds of $(n+2)$-manifolds as well.

A is not necessarily a $(n+2)$-dimensional ball. See the following pages.

Let K be a 2-knot in $\mathbb{R}^4$. Embed $S^1 \times D^3$ trivially in $\mathbb{R}^4$, where S^1 is a circle and where D^3 is the close 3-ball. Suppose the following.
(1) $K \cap (S^1 \times D^3)$ is $(S^1 \times I) \amalg (S^1 \times I)$, where I is the interval.
(2) $K \cap (S^1 \times D^3)$ is

$S^1 \times$ 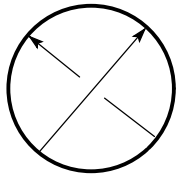 ,

where we have the following.
(i) The bold line and its interior in the above figure represent the 3-disc D^3
(ii) The arrows which are written by fine lines represent a submanifold of K.
(iii) $S^1 \times$ (each of the two arrows) is each of the above $(S^1 \times I) \amalg (S^1 \times I)$.

Fix this $S^1 \times D^3$ in $\mathbb{R}^4$.

Let K' be a 2-knot with the following properties.
(1) $K \cap (S^1 \times D^3)$ is

$S^1 \times$ 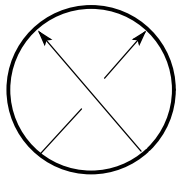

in the above chart.
(2) $K' \cap (\mathbb{R}^4 - (\text{the interior of } (S^1 \times D^3)))$
$= K \cap (\mathbb{R}^4 - (\text{the interior of } (S^1 \times D^3)))$.

Then we say that K' is obtained from K by one *cross-ring-move*.

If K'' is obtained from K by a sequence of a finite number of cross-ring-moves then we say that K'' is *cross-ring-move-equivalent* to K.

We could prove that all k-twist spun knots are cross-ring-move-equivalent to the trivial knot.

It is natural to ask the following question.

Are all 2-knots cross-ring-move-equivalent to the trivial knot?

We think it is open. Please try and solve.

We introduce some literature on high dimensional knot theory. We would be sorry if we forgot citing other important papers in the following references.

There are many other important themes associated with high dimensional knots, which are not introduced in this article: knot cobordism, link cobordism, the complements of n-knots ($n = 1$ and $n \geqq 2$), fibered n-knots ($n = 1$ and $n \geqq 2$), knot products etc. Some of the following papers and articles include them.

References

[1] W. Boy: Über die Curvatura integra und die Topologie geschlossener Flchen, *Math. Ann.* 57 (1903) 151-184.

[2] S. E. Cappell and J. L. Shaneson: There Exist Inequivalent Knots With the Same Complement *Ann. of Math. Second Series*103 (1976) 349-353.

[3] T. D. Cochran, K. E. Orr and P. Teichner: Knot Concordance, Whitney Towers and L2-Signatures *Annals of Mathematics* Second Series, Vol. 157, (2003), 433-519.

[4] A. J. Casson and C. McA. Gordon: Cobordism of classical knots *Progress in Mathematics* 62, 1975.

[5] A. J. Casson and C. McA. Gordon: On slice knots in dimension three *Proceedings of Symposia in Pure Mathematics* 32, 1978.

[6] T. D. Cochran and K. E. Orr: Not all links are concordant to boundary links *Ann. of Math.*, 138, 519–554, 1993.

[7] M. Farber: Classification of simple knots. *(Russian) Uspekhi Mat. Nauk 38*, no. 5(233), 59–106, 1983.

[8] M. . Farber: An Algebraic Classification of Some Even-Dimensional Spherical Knots. I *Transactions of the American Mathematical Society* Vol. 281 (1984) 507-527.

[9] M. . Farber: An Algebraic Classification of Some Even-Dimensional Spherical Knots. II *Transactions of the American Mathematical Society* Vol. 281 (1984) 529-570.

[10] C. McA Gordon: Knots in the 4-sphere *Commentarii Mathematici Helvetici* 51 (1976) 585-596.

[11] C. Giller: Towards a classical knot theory for surfaces in $\mathbb{R}^4$ *Illinois. J. Math.* 26 (1982) 591-631.

[12] P. M. Gilmer and C. Livingston: The Casson-Gordon invariant and link concordance *Topology* 31, 475-492, 1992.

[13] A. Haefliger: Knotted (4k - 1)-Spheres in 6k-Space *Annals of Mathematics* 75 (1962) 452-466.

[14] Louis H. Kauffman: Products of knots, *Bulletin of the American mathematical society Vol 80, No 6, November 1104-1107 1974.*

[15] L. H. Kauffman: Knots and physics, Second Edition *World Scientific Publishing* 1994.

[16] L. H. Kauffman: On knots *Ann. of Math. Stud.* , vol. 115, 1987

[17] M. Kervaire: Les noeudes de dimensions supéreures, *Bull.Soc.Math.France* 93, 225-271, 1965.

[18] Louis H. Kauffman and Walter D. Neumann: Products of knots, branched fibrations and sums of singularities, *Topology, vol 16, No 4, 369-393, 1977*
[19] J. Levine: Knot cobordism in codimension two, *Comment. Math. Helv.*, 44, 229-244, 1969.
[20] J. Levine: An algebraic classification of some knots of codimension two. *Comment. Math. Helv. 45*, 185–198, 1970.
[21] J. Levine: Polynomial invariants of knots of codimension two. *Ann. of Math. 84, 537–554*, 1966.
[22] J. Levine and K. Orr: A survey of applications of surgery to knot and link theory. *Surveys on surgery theory: surveys presented in honor of C.T.C. Wall Vol. 1, 345–364, Ann. of Math. Stud., 145, Princeton Univ. Press, Princeton, NJ, 2000.*
[23] J. Levine: Link invariants via the eta-invariant *Comment. Math. Helveticii* 69, 82-119, 1994.
[24] J. W. Milnor: On manifolds homeomorphic to the 7-sphere *Annals of Mathematics* 64 (1956) 399405.
[25] J. W. Milnor and J. D. Stasheff: Characteristic classes. *Annals of Mathematics Studies, No. 76. Princeton University Press* 1974.
[26] D. Rolfsen: Knots and links *Publish or Perish, Inc.* 1976.
[27] D. Ruberman: Doubly slice knots and the Casson-Gordon invariants *Trans. Amer. Math. Soc.* 279 (1983) 569-588.
[28] N. Sato: 'Cobordisms of semi-boundary links' *Topology and its application*18 (1984) 225-234.
[29] A. I. Suciu: Inequivalent frame-spun knots with the same complement *Commentarii Mathematici Helvetici* 67 (1992) 47-63.
[30] E. Zeeman: Twisting spun knots *Trans. AMS* 115 (1965) 471-495.

The author's papers, books and article (One of the papers is a joint work.)

[31] E. Ogasa: The intersection of spheres in a sphere and a new geometric meaning of the Arf invariants, *Journal of knot theory and its ramifications, 11(2002) 1211-1231*, Univ. of Tokyo preprint series UTMS 95-7, math.GT/0003089 in http://xxx.lanl.gov.
[32] E. Ogasa: Intersectional pairs of n-knots, local moves of n-knots and invariants of n-knots, *Mathematical Research Letters, 1998, vol5, 577-582*, Univ. of Tokyo preprint UTMS 95-50.
[33] E. Ogasa: The intersection of spheres in a sphere and a new application of the Sato-Levine invariant, *Proceedings of the American Mathematical Society 126, 1998, PP.3109-3116.* UTMS95-54.
[34] E. Ogasa: Some properties of ordinary sense slice 1-links: Some answers to the problem (26) of Fox, *Proceedings of the American Mathematical Society 126, 1998, PP.2175-2182.* UTMS96-11.
[35] E. Ogasa: The projections of n-knots which are not the projection of any unknotted knot, *Journal of knot theory and its ramifications, 10 (2001), no. 1, 121–132.* UTMS 97-34, math.GT/0003088.

[36] E. Ogasa: Singularities of projections of n-dimensional knots, *Mathematical Proceedings of Cambridge Philosophical Society 126, 1999, 511-519.* UTMS96-39

[37] E. Ogasa: Link cobordism and the intersection of slice discs, *Bulletin of the London Mathematical Society, 31, 1999, 1-8.*

[38] E. Ogasa: Ribbon-moves of 2-links preserve the μ-invariant of 2-links, *Journal of knot theory and its ramifications, 13 (2004), no. 5, 669–687.* UTMS 97-35, math.GT/0004008.

[39] E. Ogasa: Local move identities for the Alexander polynomials of high-dimensional knots and inertia groups, *Journal of Knot Theory and Its Ramifications (JKTR) Volume: 18 No: 4 Year: 2009 pp. 531-545* UTMS 97-63. math.GT/0512168.

[40] E. Ogasa: Nonribbon 2-links all of whose components are trivial knots and some of whose bund-sums are nonribbon knots, *Journal of knot theory and its ramifications, 10 (2001), no. 6, 913–922.*

[41] E. Ogasa: n-dimensional links, their components, and their band-sums, math.GT/0011163. UTMS00-65.

[42] E. Ogasa: Ribbon-moves of 2-knots: The Farber-Levine pairing and the Atiyah-Pathodi-Singer-Casson-Gordon-Ruberman $\tilde{\eta}$ invariant of 2-knots, *Journal of Knot Theory and Its Ramifications, Vol. 16, No. 5 (2007) 523-543* math.GT/0004007, UTMS 00-22, math.GT/0407164.

[43] E. Ogasa: Supersymmetry, homology with twisted coefficients and n-dimensional knots, *International Journal of Modern Physics A,* Vol. 21, Nos. 19-20 (2006) 4185-4196 hep-th/0311136.

[44] E. Ogasa: A new invariant associated with decompositions of manifolds, math.GT/0512320, hep-th/0401217

[45] E. Ogasa: A new obstruction for ribbon-moves of 2-knots: 2-knots fibred by the punctured 3-torus and 2-knots bounded by the Poicaré sphere, arXiv:1003.2473math.GT

[46] L.H.Kauffman and E. Ogasa: Local moves on knots and products of knots, arXiv:1210.4667v1 math.GT

[47] E. Ogasa: Make your Boy surface, arXiv:1303.6448 math.GT

[48] E. Ogasa: Ijigen e no tobira (In Japanese) *Nippon Hyoron Sha Co., Ltd.* 2009.

[49] E. Ogasa: Yojigen ijou no kûkan ga mieru (In Japanese) Beret Shuppan 2006.

Eiji Ogasa
Computer Science, Meijigakuin University, Yokohama, Kanagawa, 244-8539, Japan
ogasa@mail1.meijigkakuin.ac.jp pqr100pqr100@yahoo.co.jp
Manuscripts of the author's papers can be obtained from his website
http://www.geocities.jp/n_dimension_n_dimension/list.html
Don't forget the three _ in this address if you type it.
You can find his website by typing in the author's name 'Eiji Ogasa' in the search engine although you will not type the address of the website.