Optimal and Robust Transmit Designs for MISO Channel Secrecy by Semidefinite Programming

Qiang Li† and Wing-Kin Ma‡

arXiv:1012.3875v1 [cs.IT] 17 Dec 2010

Submitted to *IEEE Trans. Signal Process.*
First Revision, Dec 2010

Abstract

In recent years there has been growing interest in study of multi-antenna transmit designs for providing secure communication over the physical layer. This paper considers the scenario of an intended multi-input single-output channel overheard by multiple multi-antenna eavesdroppers. Specifically, we address the transmit covariance optimization for secrecy-rate maximization (SRM) of that scenario. The challenge of this problem is that it is a nonconvex optimization problem. This paper shows that the SRM problem can actually be solved in a convex and tractable fashion, by recasting the SRM problem as a semidefinite program (SDP). The SRM problem we solve is under the premise of perfect channel state information (CSI). This paper also deals with the imperfect CSI case. We consider a worst-case robust SRM formulation under spherical CSI uncertainties, and we develop an optimal solution to it, again via SDP. Moreover, our analysis reveals that transmit beamforming is generally the optimal transmit strategy for SRM of the considered scenario, for both the perfect and imperfect CSI cases. Simulation results are provided to illustrate the secrecy-rate performance gains of the proposed SDP solutions compared to some suboptimal transmit designs.

Index terms– Physical-layer secrecy, secrecy capacity, transmit beamforming, semidefinite program.

EDICS: MSP-CODR (MIMO precoder/decoder design), MSP-APPL (Applications of MIMO communications and signal processing), SAM-BEAM (Applications of sensor and array multichannel processing)

§This work is supported by a General Research Fund awarded by Research Grant Council, Hong Kong (Project No. CUHK415908). Part of this work appears in ICASSP 2010.

†Qiang Li is with Department of Electronic Engineering, The Chinese University of Hong Kong, Shatin, Hong Kong S.A.R., China. E-mail: qli@ee.cuhk.edu.hk.

‡Wing-Kin Ma is the corresponding author. Address: Department of Electronic Engineering, The Chinese University of Hong Kong, Shatin, Hong Kong S.A.R., China. E-mail: wkma@ieee.org.

I. Introduction

Physical-layer secrecy is an information theoretic approach where we intend to provide a legitimate receiver with a reliable communication, and, at the same time, make sure that illegitimate receivers can retrieve almost nothing about the transmitted information from the signals they have intercepted. The study of this topic is meaningful and important, enabling us to understand the information rate limits when perfect secrecy is desired; i.e., the secrecy capacity or the maximum secrecy rate. Moreover, the physical-layer secrecy study provides us with vital implications on how physical-layer secret transmit schemes should be designed in practice. While the concepts of physical-layer secrecy can be found back in the 70's; e.g., the seminal works by Wyners [1], Lee-Yan-Cheong and Hellman [2], and Csisźar and Körner [3], this topic has attracted much interest in recent years, in both information theory [4]–[11] and signal processing [12]–[23]. We can see at least two reasons for this. First, the rapid advances of wireless system architectures and applications, such as those for wireless networks, have given rise to new issues regarding information security. In particular, the open nature of the wireless medium means that signal interception may be easily conducted by eavesdroppers (as compared to wiretapping in wireline systems). Cryptographic encryption, the class of techniques commonly used to provide information security, is expected to be faced with more challenges; for instance, in key distribution and management [24], [25]. Physical-layer secrecy suggests a physical-layer-based alternative to attacking the security problem, which is meaningful and may complement cryptographic encryption (which is network-layer-based). Second, multi-input multi-output (MIMO) techniques provide physical-layer secrecy with new and exciting opportunities. Intuitively, if we know the channel state information (CSI) of the eavesdroppers to a certain extent (say, in scenarios where the eavesdroppers are users of the system, who attempt to access unauthorized services), then we may utilize the MIMO degree of freedom to weaken these eavesdroppers' receptions. Another idea that is possible only with MIMO is that of interfering eavesdroppers through artificially generated spatial noise; see [14] for the original work and [12], [15], [17], [18], [23] for some recent developments.

In fact, we have recently seen a growing body of physical-layer secrecy literatures that deal with various MIMO scenarios. For the scenario of an MIMO channel overheard by one multi-antenna eavesdropper, the secrecy capacity has been considered in [5]–[8], [26]. The MISO counterpart has also caught some attention; see [4], [11]. We should note that there is a difference between the above described MIMO and MISO scenarios, from a viewpoint of transmit optimization. Specifically, we are interested in transmit covariance designs for achieving the maximum secrecy rate. This secrecy-rate maximization (SRM)

problem is nonconvex, and solving it under the general MIMO scenario is a challenging issue; see [19], [21] for some recent endeavors. One exception where the SRM problem is found to be tractable is the MISO scenario — its optimal transmit design is shown to admit a closed-form solution, involving a generalized eigenvalue problem [4].

This paper considers the scenario of an MISO channel overheard by *multiple* multi-antenna eavesdroppers. This scenario would happen, say, for example, in a downlink environment where the intended receiver uses one antenna for low operational costs and the eavesdroppers are users of the same network employing sophisticated multi-antenna hardware to improve their interceptions. The SRM problem for this particular scenario has been formulated in [10]. The problem is again nonconvex, and, to our knowledge, an efficient optimal transmit solution to it has not been available in general. We should mention that for the special case of one-antenna eavesdroppers, an optimal SRM design has been proposed in [16]; the idea there is to establish a relationship between the SRM problem and a cognitive radio design (CR) problem under the one-antenna eavesdroppers/secondary-users context. That secrecy-CR relationship result is applicable also to MIMO intended channel. For the multiple-antenna eavesdroppers case, the secrecy-CR relationship result does not apply and it is used as an approximation to the SRM problem [16]. This paper shows that the considered SRM problem can actually be solved in a convex and tractable fashion; specifically, we turn the SRM problem to a semidefinite program (SDP), a representative convex optimization problem whose globally optimal solution can be obtained efficiently by available algorithms [27], [28]. The proposed approach is indirect, and it may remind us of study of some kind of dual problems[1] in the context of multiuser downlink transmit beamforming [29], [30]; also [31], [32] for multiuser downlink OFDM. In particular, we need to consider another secrecy-rate formulation, namely, a secrecy-rate constrained problem, and use the results established there to prove that the SRM problem has an SDP equivalent.

Another key contribution of this work is that we extend our secrecy-rate optimization results to the imperfect CSI case. The eavesdroppers' CSIs may be estimated depending on the application environment (e.g., when the eavesdroppers are also system users), however we may only have some inaccurate, possibly rough, knowledge about those CSIs. The CSI of the intended receiver may also be subject to some uncertainties (e.g., those caused by channel estimation errors and/or quantization errors), though such an issue should be less severe than that for the eavesdroppers. We should note that physical-layer secrecy with imperfect CSI or no CSI has started to catch attention very recently; see, e.g., [4], [15], [18],

[1]The dual problem relationship we refer to is that of the quality-of-service (QoS) constrained power minimization problem and the power constrained QoS maximization problem [29].

[22], [33]. Here, we consider a robust SRM formulation of our considered scenario, where we employ a spherical CSI uncertainty model and the uncertainties are handled in a worst-case sense. The proposed robust SRM formulation is a conservative design— it guarantees perfect secrecy for any admissible CSI uncertainties, including the worst. The robust SRM formulation exhibits a more complex structure than its non-robust counterpart. Fortunately, it is shown that the robust SRM problem can be equivalently represented, and solved, by an SDP; in addition to the approach used in non-robust SRM, the idea is to employ linear matrix inequality characterization to handle the imperfect-CSI induced constraints in a tractable way.

In establishing our optimal SDP solutions to the SRM problems, we obtain a physical result that agrees well with intuitive expectation — transmit beamforming is generally the SRM optimal transmit strategy of the considered scenario, for both the perfect and imperfect CSI cases. While this result is already known for the one multi-antenna eavesdropper case [4] and the multiple one-antenna eavesdroppers case [16] (both with perfect CSI), the result here is more general.

This paper is organized as follows. A background review and problem statement is given in Section II. Section III considers the SRM problem for the MISO, multi-eavesdropper scenario with perfect CSI, and establishes an SDP solution to it. Section IV extends the SRM results to the imperfect CSI case. Simulation results comparing the proposed SRM solutions and some other suboptimal secrecy transmit designs are illustrated in SectionV. Section VI gives the conclusion and discussion.

Our notations are as follows. We will use boldface capital letters to denote matrices, boldface lower case letters to denote vectors; $\mathbf{A}^T$, $\mathbf{A}^H$, $\mathbf{A}^\dagger$, $\mathrm{Tr}(\mathbf{A})$ and $\det(\mathbf{A})$ represent transpose, Hermitian (conjugate) transpose, pseudo inverse, trace and determinant of a matrix $\mathbf{A}$; $\mathbf{I}$ denotes an identity matrix; $\|\cdot\|_F$ represents the Frobenius norm of a matrix; rank($\mathbf{A}$) is the rank of matrix $\mathbf{A}$; $\mathbf{A} \succeq \mathbf{0}$ $(\mathbf{A} \succ \mathbf{0})$ means $\mathbf{A}$ is a Hermitian positive semidefinite (definite) matrix; $\mathbb{R}_+$ denotes the set of all nonnegative real numbers; $\mathbb{H}^N$ denotes the set of all N-by-N Hermitian matrices; $\mathbb{H}_+^N$ denotes the set of all N-by-N Hermitian positive semidefinite matrices; $\mathbb{C}^{M\times N}$ represents a M-by-N dimensional complex matrix set; $\mathbf{A} \otimes \mathbf{B}$ denotes the Kronecker product of $\mathbf{A}$ and $\mathbf{B}$; $\mathrm{vec}(\mathbf{A})$ denotes the vectorization of matrix $\mathbf{A}$ by stacking its columns; $\mathrm{E}\{\cdot\}$ is the expectation operator.

II. Background and Problem Statement

In this section we review some basic concepts of physical-layer secrecy with an emphasis on the MISO scenarios, and provide the problem statement of our interested scenario.

A. One Eavesdropper Case: A Review

The endeavor of this subsection is to give some intuitive insights into physical-layer secrecy, by reviewing the scenario of a MISO channel overheard by one eavesdropper (also known as the MISOME wiretap channel in the literature [4]). As shown in Fig. 1(a), in this configuration, the transmitter is equipped with multiple antennas, intending to deliver information to the legitimate receiver which uses one antenna. One eavesdropper is present, and it uses multiple antennas to intercept the transmission. Following the convention in the secrecy capacity literature, we call the transmitter, the legitimate receiver, and the eavesdropper as *Alice*, *Bob*, and *Eve*, respectively. The signal models for the Alice-to-Bob and Alice-to-Eve links are, respectively,

$$y_b(t) = \mathbf{h}^H \mathbf{x}(t) + n(t), \tag{1a}$$

$$\mathbf{y}_e(t) = \mathbf{G}^H \mathbf{x}(t) + \mathbf{v}(t). \tag{1b}$$

Here, $\mathbf{x}(t) \in \mathbb{C}^{N_t}$ is the transmit vector by Alice, with N_t being the number of transmit antennas; $\mathbf{h} \in \mathbb{C}^{N_t}$ represents the MISO Alice-to-Bob channel; $\mathbf{G} \in \mathbb{C}^{N_t \times N_e}$ represents the MIMO Alice-to-Eve channel, with N_e being the number of receive antennas at Eve; and $n(t) \in \mathbb{C}$, $\mathbf{v}(t) \in \mathbb{C}^{N_e}$ are zero-mean additive white Gaussian noises. Without loss of generality, we assume unit variance of all the noise terms; i.e., $\mathrm{E}\{|n(t)|^2\} = 1$, $\mathrm{E}\{\mathbf{v}(t)\mathbf{v}^H(t)\} = \mathbf{I}$.

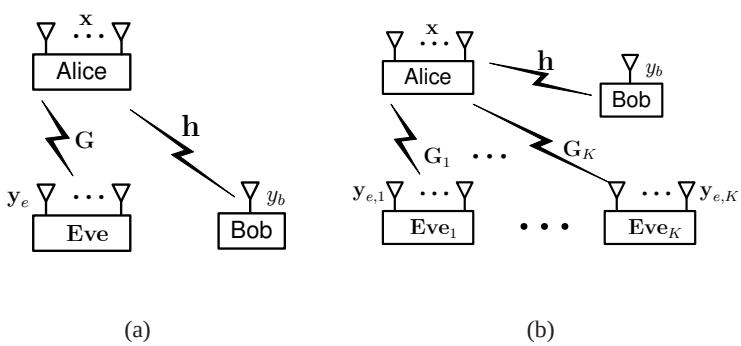

Fig. 1. System model. (a) One multi-antenna eavesdropper; (b) Multiple multi-antenna eavesdroppers.

The problem of interest here is to prevent Eve from retrieving useful information via appropriate transmit designs, and this can be addressed by using the notion of physical-layer secrecy [34]. To describe this, let us denote the transmit covariance by

$$\mathbf{W} = \mathrm{E}\{\mathbf{x}(t)\mathbf{x}^H(t)\}.$$

According to [4], the transmit covariance design that provides the maximum secrecy rate for the system model (1) is given by

$$\begin{aligned} R^\star(P) = \max_{\mathbf{W}} \quad & \log(1+\mathbf{h}^H\mathbf{W}\mathbf{h}) - \log\det(\mathbf{I}+\mathbf{G}^H\mathbf{W}\mathbf{G}) \\ \text{s.t.} \quad & \mathbf{W}\succeq\mathbf{0},\ \mathrm{Tr}(\mathbf{W})\le P, \end{aligned} \tag{2}$$

where P is a given average transmit power limit, and $R^\star(P)$ is defined to be the optimal secrecy rate (in bps/Hz) for a given P. As seen in (2), the problem is to maximize the mutual information difference between the Alice-to-Bob and Alice-to-Eve channels. The subsequent optimized rate $R^\star(P)$ is achievable— from an information theoretic perspective, there exist codes such that Bob can obtain a perfectly secure message from Alice at a rate of $R^\star(P)$ bps/Hz, while Eve can retrieve almost nothing about the message [3]. It has also been shown that (2) is the secrecy capacity for the one-Eve model in (1).

The secrecy-rate maximization problem in (2) has a closed-form solution. Let $\mathbf{q}$ be the unit-norm principal generalized eigenvector of $(\mathbf{I}+P\mathbf{h}\mathbf{h}^H, \mathbf{I}+P\mathbf{G}\mathbf{G}^H)$. The optimal transmit design of (2), denoted herein by $\mathbf{W}^\star$, can be shown to be [4]

$$\mathbf{W}^\star = \begin{cases} P\mathbf{q}\mathbf{q}^H, & f(P\mathbf{q}\mathbf{q}^H) > 0 \\ \mathbf{0}, & f(P\mathbf{q}\mathbf{q}^H) \le 0 \end{cases} \tag{3}$$

where $f(\mathbf{W}) = \log(1+\mathbf{h}^H\mathbf{W}\mathbf{h}) - \log\det(\mathbf{I}+\mathbf{G}^H\mathbf{W}\mathbf{G})$ denotes the secrecy rate of a given $\mathbf{W}$. The structure of $\mathbf{W}^\star$ shown above reveals two physical results: First, the optimal transmit strategy for the case of $R^\star(P) > 0$ (positive secrecy rate) is to employ a rank-one transmit structure; i.e., transmit beamforming. Second, the optimal transmit design for the (trivial) case of $R^\star(P) = 0$ is to shut down the transmitter.

B. Multi-Eavesdropper Case

This paper focuses on the scenario of MISO Alice-to-Bob link and multiple MIMO Alice-to-Eves links; such a configuration is depicted in Fig. 1(b). For this scenario the system model is modified to

$$y_b(t) = \mathbf{h}^H\mathbf{x}(t) + n(t), \tag{4a}$$

$$\mathbf{y}_{e,k}(t) = \mathbf{G}_k^H\mathbf{x}(t) + \mathbf{v}_k(t), \quad k = 1,\ldots,K, \tag{4b}$$

where the Alice-to-Bob channel model in (4a) is identical to that in (1a); $\mathbf{y}_{e,k}(t)$ is the received signal at the kth Eve; $\mathbf{G}_k \in \mathbb{C}^{N_t\times N_{e,k}}$ is the MIMO channel from Alice to the kth Eve; $N_{e,k}$ is the number of receive antennas of the kth Eve; $\mathbf{v}_k(t)$ is additive white Gaussian noise with zero mean and $\mathrm{E}\{\mathbf{v}_k(t)\mathbf{v}_k(t)^H\} = \mathbf{I}$;

K is the number of Eves. An achievable secrecy rate for the multiple-Eve model (4) has been derived in [10] and is given by

$$\begin{aligned} R^\star(P) = \max_{\mathbf{W}} \quad & \min_{k=1,\ldots,K} f_k(\mathbf{W}) \\ \text{s.t.} \quad & \mathbf{W} \succeq \mathbf{0},\ \mathrm{Tr}(\mathbf{W}) \leq P \end{aligned} \tag{5}$$

where

$$f_k(\mathbf{W}) = \log(1 + \mathbf{h}^H \mathbf{W} \mathbf{h}) - \log\det(\mathbf{I} + \mathbf{G}_k^H \mathbf{W} \mathbf{G}_k) \tag{6}$$

is the secrecy rate function corresponding to the kth Eve. The goal of (5) is to maximize the worst secrecy rate (or mutual information difference) among all the Eves.

The secrecy-rate maximization (SRM) problem (5) presents a challenge from the standpoint of transmit covariance optimization. Problem (5) is a nonconvex problem, due to the nonconcave, Eve-induced terms $-\log\det(\mathbf{I} + \mathbf{G}_k^H \mathbf{W} \mathbf{G}_k)$. While this nonconvex SRM problem admits a closed-form solution in the one-Eve case (as mentioned above), it is not known if the SRM problem can also be solved in closed form for the general multi-Eve case.

We should mention a transmit design that has a closed-form solution but is generally suboptimal in the SRM context, namely, *projected maximum-ratio transmission (projected-MRT)*. The idea is to apply nulling on all Eves; i.e., to enforce $\mathbf{G}_k^H \mathbf{W} = \mathbf{0}$ for all k. Let $\boldsymbol{G} = [\ \mathbf{G}_1, \ldots, \mathbf{G}_K\ ]$ be the aggregate channel matrix of all Eves, and $\boldsymbol{\Pi}_{\boldsymbol{G}}^\perp = \mathbf{I} - \boldsymbol{G}(\boldsymbol{G}^H \boldsymbol{G})^\dagger \boldsymbol{G}^H$ be the orthogonal complement projector of $\boldsymbol{G}$. The transmit beamformer weight in projected-MRT is

$$\boldsymbol{w} = \frac{\sqrt{P}}{\|\boldsymbol{\Pi}_{\boldsymbol{G}}^\perp \mathbf{h}\|_2} \boldsymbol{\Pi}_{\boldsymbol{G}}^\perp \mathbf{h},$$

or, in other words, we choose $\mathbf{W} = \boldsymbol{w}\boldsymbol{w}^H$. The advantage of projected-MRT lies in its simplicity, but its downside is that we may not have the degree of freedom to perform nulling when the total number of antennas of Eves, $\sum_{k=1}^K N_{e,k}$, reaches or exceeds the number of transmit antennas N_t.

In what follows, we will describe our approach to solving the SRM problem (5).

III. An SDP Approach to the Secrecy Rate Maximization Problem

The focus of this section is on solving Problem (5), the secrecy-rate maximization of an MISO channel eavesdropped by multiple multi-antenna eavesdroppers. We will show how the SRM problem (5), which is nonconvex, can actually be solved by an equivalent SDP problem that is convex and tractable.

The idea behind the proposed SDP solution is to consider some form of convex approximation to the SRM (5), and then to prove that that approximate SRM problem is indeed tight. The latter part is not

straightforward. We will need to study a variation of SRM, given as follows:

$$\begin{aligned} P^\star(R) = \min_{\mathbf{W}\succeq\mathbf{0}} \quad & \mathrm{Tr}(\mathbf{W}) \\ \text{s.t.} \quad & \min_{k=1,\ldots,K} f_k(\mathbf{W}) \geq R. \end{aligned} \tag{7}$$

The design in (7) seeks to satisfy a minimum secrecy rate specification R (which is given) and to minimize the average power. The reason for considering the secrecy-rate constrained (SRC) problem (7) is that it is relatively easier to analyze than the SRM (5). And, as a side advantage, the SRC design itself is interesting and practically meaningful. We will develop some key results for Problem (7), e.g., that (7) has an SDP equivalent. We will then establish a link between the SRC problem (7) and the SRM problem (5), thereby allowing us to use the proven results in SRC to show that SRM can be exactly solved by an SDP.

The first and second subsections describe our developments for the SRC and SRM problems, respectively.

A. The Secrecy-Rate Constrained Problem

To study the SRC problem (7), let us express (7) in a more explicit form:

$$\begin{aligned} P^\star(R) = \min_{\mathbf{W}\succeq\mathbf{0}} \quad & \mathrm{Tr}(\mathbf{W}) \\ \text{s.t.} \quad & 2^{-R} \geq \max_{k=1,\ldots,K} \frac{\det(\mathbf{I}+\mathbf{G}_k^H\mathbf{W}\mathbf{G}_k)}{1+\mathbf{h}^H\mathbf{W}\mathbf{h}}. \end{aligned} \tag{8}$$

Problem (8) is nonconvex, due to the determinant functions in the constraint of (8). Consider the following lemma which we will use to provide a convex approximation to (8):

Lemma 1 *Let* $\mathbf{A}\succeq\mathbf{0}$*. It holds true that*

$$\det(\mathbf{I}+\mathbf{A}) \geq 1+\mathrm{Tr}(\mathbf{A}), \tag{9}$$

and that the equality in (9) *holds if and only if* $\mathrm{rank}(\mathbf{A})\leq 1$.

Proof: Let $r=\mathrm{rank}(\mathbf{A})$. The case of $r=0$ is trivial. For $r\geq 1$, let $\lambda_1\geq\lambda_2\geq\ldots\geq\lambda_r>0$ denote the non-zero eigenvalues of $\mathbf{A}$. We have that

$$\begin{aligned} \det(\mathbf{I}+\mathbf{A}) = \textstyle\prod_{i=1}^r(1+\lambda_i) &= 1+\textstyle\sum_{i=1}^r\lambda_i+\sum_{i\neq k}\lambda_i\lambda_k+\ldots \\ &\geq 1+\textstyle\sum_{i=1}^r\lambda_i = 1+\mathrm{Tr}(\mathbf{A}) \end{aligned}$$

and it can be seen that the equality above holds if and only if $r=1$. ■

Applying Lemma 1 to Problem (8), we obtain a relaxation of (8) as follows:

$$\begin{aligned} P^\star(R) \geq P^\star_{relax}(R) = \min_{\mathbf{W}\succeq\mathbf{0}} \quad & \mathrm{Tr}(\mathbf{W}) \\ \text{s.t.} \quad & 2^{-R} \geq \max_{k=1,\ldots,K} \frac{1+\mathrm{Tr}(\mathbf{G}_k^H\mathbf{W}\mathbf{G}_k)}{1+\mathbf{h}^H\mathbf{W}\mathbf{h}}. \end{aligned} \tag{10}$$

Problem (10) is a convex problem. Specifically, (10) can be formulated as an SDP

$$\begin{aligned} P^\star_{relax}(R) = \min_{\mathbf{W}} \quad & \mathrm{Tr}(\mathbf{W}) \\ \text{s.t.} \quad & \mathbf{W}\succeq\mathbf{0}, \\ & 1+\mathrm{Tr}(\mathbf{h}\mathbf{h}^H\mathbf{W}) \geq 2^R(1+\mathrm{Tr}(\mathbf{G}_k\mathbf{G}_k^H\mathbf{W})), \\ & k=1,\ldots,K, \end{aligned} \tag{11}$$

whose globally optimal solution can be efficiently found by available solvers [27], [28]. While our original motivation is to approximate the SRC problem (8) by the convex relaxation (10), Lemma 1 provides an important hint regarding the tightness of the relaxation: The relaxation (10) is tight (which means $P^\star(R) = P^\star_{relax}(R)$) when the optimal solution of (10) is of rank one. We prove the following key result:

Proposition 1 *Consider the relaxed SRC problem* (10) *for the case where the secrecy-rate specification R is positive*[2]*, or simply $R > 0$. Also, suppose that problem* (10) *is feasible. Then, the optimal solution of* (10) *must be of rank one and unique.*

The proof, which can be found in Appendix A, is based on examination of the Karush-Kuhn-Tucker (KKT) conditions of the SDP (11).

Using Proposition 1 and Lemma 1, we reach the conclusion that

Corollary 1 *Consider the SRC problem* (8) *for the case $R > 0$, and suppose that problem* (8) *is feasible. The relaxed SRC problem* (10) *[or the SDP* (11)*] exactly solves the SRC problem, in the sense that the optimal solution of* (10) *is also that of* (8)*, and vice versa. Moreover, the optimal SRC solution is unique and of rank one.*

Proof: Let $\hat{\mathbf{W}}$ be the optimal solution of (10), which is unique and of rank one by Proposition 1. By Lemma 1, $\hat{\mathbf{W}}$ is feasible to (8), which implies that $P^\star_{relax}(R) = \mathrm{Tr}(\hat{\mathbf{W}}) \geq P^\star(R)$. Since we also have $P^\star(R) \geq P^\star_{relax}(R)$ [cf., Eqn. (10)], we conclude that $P^\star_{relax}(R) = P^\star(R)$; i.e., $\hat{\mathbf{W}}$ is optimal to (8).

[2]The case of $R = 0$ is trivial since $\mathbf{W} = \mathbf{0}$ can easily be verified to be the corresponding optimal solution of (10).

On the other hand, let $\mathbf{W}^\star$ be an optimal solution of (8). Owing to Lemma 1, $\mathbf{W}^\star$ is feasible to (10). The result $P^\star_{relax}(R) = P^\star(R) = \mathrm{Tr}(\mathbf{W}^\star)$ further implies that $\mathbf{W}^\star$ is optimal to (10), too. By Proposition 1, $\mathbf{W}^\star$ has to be unique and of rank one. ■

We have developed an SDP solution to the SRC problem (8). Moreover, the unique rank-one nature of the SRC solution, as indicated in Corollary 1, suggests that transmit beamforming is generally the optimal transmit strategy for the SRC problem (8).

B. The Secrecy-Rate Maximization Problem

We now turn our attention to the SRM problem (5). For convenience, we rewrite Problem (5) as

$$\gamma^\star(P) = \min_{\substack{\mathbf{W}\succeq\mathbf{0}\\ \mathrm{Tr}(\mathbf{W})\leq P}} \max_{k=1,\ldots,K} \frac{\det(\mathbf{I}+\mathbf{G}_k^H\mathbf{W}\mathbf{G}_k)}{1+\mathbf{h}^H\mathbf{W}\mathbf{h}} \tag{12}$$

where $0 < \gamma^\star(P) \leq 1$ is related to the optimal secrecy rate through the relation $R^\star(P) = \log(1/\gamma^\star(P))$. Following the same spirit as in the preceding subsection, we apply Lemma 1 to (12) to obtain a relaxation:

$$\gamma^\star(P) \geq \gamma^\star_{relax}(P) = \min_{\substack{\mathbf{W}\succeq\mathbf{0}\\ \mathrm{Tr}(\mathbf{W})\leq P}} \max_{k=1,\ldots,K} \frac{1+\mathrm{Tr}(\mathbf{G}_k^H\mathbf{W}\mathbf{G}_k)}{1+\mathbf{h}^H\mathbf{W}\mathbf{h}}. \tag{13}$$

The relaxation above is a quasi-convex problem, whose globally optimal solution can be searched by general techniques for quasi-convex optimization (e.g., bisection [35]). We however will propose a more efficient method of solving (13); namely, via SDP, after we study the tightness of the relaxation in (13).

Our key question here is whether Problem (13) yields a rank-one solution: If it does, then the relaxation (13) is tight ($\gamma^\star(P) = \gamma^\star_{relax}(P)$) by Lemma 1. Our insight to this is as follows: Suppose that $\gamma^\star_{relax}(P)$ in (13) has been computed. We consider the following relaxed SRC problem

$$\begin{aligned} \min_{\mathbf{W}\succeq\mathbf{0}} \quad & \mathrm{Tr}(\mathbf{W}) \\ \text{s.t.} \quad & \gamma^\star_{relax}(P) \geq \max_{k=1,\ldots,K} \frac{1+\mathrm{Tr}(\mathbf{G}_k^H\mathbf{W}\mathbf{G}_k)}{1+\mathbf{h}^H\mathbf{W}\mathbf{h}}, \end{aligned} \tag{14}$$

where we fix the secrecy rate specification at $R = \log(1/\gamma^\star_{relax}(P))$. By Proposition 1, we know that Problem (14) has a unique rank-one solution (in the nontrivial case). If the optimal solution of (14) can be proven to be an optimal solution of (13) as well, then we will be able to infer immediately that the relaxation (13) is tight. With this idea in mind, we give a formal proof in Appendix B and show that

Theorem 1 *Consider the SRM problem* (12) *for the case of* $0 < \gamma^\star(P) < 1$. *The relaxed SRM problem* (13) *exactly solves the SRM problem, in the sense that the optimal solution of* (13) *is also that of* (12)*, and vice versa. Moreover, the optimal SRM solution is unique and of rank one*[3].

The remaining issue is to solve the equivalent SRM problem (13). Problem (13) can be solved by using a bisection search methodology commonly used in quasi-convex optimization. However, such a method would require solving a sequence of (usually many) SDPs. Here we propose a more efficient alternative where we exploit the problem structures and recast (13) as an SDP. The idea is to use the Charnes-Cooper transformation [36], [37]. Let us consider the following transformation of the transmit covariance:

$$\mathbf{W} = \mathbf{Z}/\xi$$

for some $\mathbf{Z} \succeq \mathbf{0}$, $\xi > 0$. The change of variables above enables us to re-express (13) as

$$\min_{\mathbf{Z},\xi} \max_{k=1,\ldots,K} \frac{\xi + \mathrm{Tr}(\mathbf{G}_k\mathbf{G}_k^H\mathbf{Z})}{\xi + \mathrm{Tr}(\mathbf{h}\mathbf{h}^H\mathbf{Z})} \tag{15a}$$

$$\text{s.t. } \mathrm{Tr}(\mathbf{Z}) \leq \xi P, \tag{15b}$$

$$\mathbf{Z} \succeq \mathbf{0},\ \xi > 0, \tag{15c}$$

which may further be reformulated as an SDP

$$\min_{\mathbf{Z},\xi,\tau} \tau \tag{16a}$$

$$\text{s.t. } \xi + \mathrm{Tr}(\mathbf{G}_k\mathbf{G}_k^H\mathbf{Z}) \leq \tau,\ k = 1,\ldots,K, \tag{16b}$$

$$\xi + \mathrm{Tr}(\mathbf{h}\mathbf{h}^H\mathbf{Z}) = 1, \tag{16c}$$

$$\mathrm{Tr}(\mathbf{Z}) \leq \xi P, \tag{16d}$$

$$\mathbf{Z} \succeq \mathbf{0},\ \xi \geq 0. \tag{16e}$$

Note that (16a)-(16b) is a consequence of the standard epigraph reformulation (see the literature, e.g., [35]), and the constraint (16c) is additionally introduced to fix the denominator of the objective function in (15a) which is without loss of generality. The relatively more crucial part with the reformulation lies in replacing $\xi > 0$ in (15c) by $\xi \geq 0$ in (16e). We show that this will not cause a problem:

[3]The case of $\gamma^\star(P) = 1$ is trivial because that corresponds to zero secrecy rate and the respective SRM solution is simply $\mathbf{W} = \mathbf{0}$.

Proposition 2 *The SDP* (16) *is equivalent to Problem* (15). *The former is also equivalent to the SRM problem* (12) *through the relation* $\mathbf{W} = \mathbf{Z}/\xi$.

Proof: The remaining, nontrivial part is when $\xi = 0$ in (16e). Suppose that this is true. Then, by (16d) and $\mathbf{Z} \succeq \mathbf{0}$, we must have $\mathbf{Z} = \mathbf{0}$. The constraint (16c) is then violated as a consequence. Thus, a feasible point of (16) must not have $\xi = 0$. This prove that Problem (16) is equivalent to Problem (15). The solution equivalence of Problems (15) and (12) through $\mathbf{W} = \mathbf{Z}/\xi$ follows from the discussion above and Theorem 1. ■

Concluding, we have shown that the SRM problem (12) can essentially be solved by using SDP; see Theorem 1 and Proposition 2. Moreover, Theorem 1 reveals that the SRM solution must be of rank one, which implies that transmit beamforming is generally the optimal transmit strategy for the SRM problem.

IV. Secrecy-Rate Optimization with Imperfect CSI

The MISO secrecy problems solved in the previous sections have been based on a premise that the CSIs of Bob and Eves are perfectly known to Alice. In this section, we extend our results to the imperfect CSI case. We will consider robust MISO secrecy-rate formulations that cater for CSI uncertainties in the worst-case sense. The proposed robust secrecy-rate problems are more complex in structures and more challenging to solve than their perfect-CSI counterparts, but we will show that these problems can still be turned to SDPs. The robust formulations will be presented in the first subsection, while the SDP solutions to the robust formulations will be described in the second and third subsections.

A. Robust Secrecy-Rate Problem Formulations

Our model assumption for imperfect CSI is based on the deterministic model [38]–[40]. We model the Alice-to-Bob channel and the Alice-to-Eve channels respectively by

$$\mathbf{h} = \bar{\mathbf{h}} + \Delta\mathbf{h},$$

$$\mathbf{G}_k = \bar{\mathbf{G}}_k + \Delta\mathbf{G}_k, \quad k = 1, \ldots, K.$$

Here, $\bar{\mathbf{h}}$ and $\bar{\mathbf{G}}_k$ are the channel means and they are known to Alice; $\Delta\mathbf{h}$ and $\Delta\mathbf{G}_k$ represent the channel uncertainties. These uncertainties are assumed to be deterministic unknowns with bounds on their magnitudes:

$$\|\Delta\mathbf{h}\|_2 = \|\mathbf{h} - \bar{\mathbf{h}}\|_2 \leq \varepsilon_b,$$

$$\|\Delta\mathbf{G}_k\|_F = \|\mathbf{G}_k - \bar{\mathbf{G}}_k\|_F \leq \varepsilon_{e,k}, \quad k = 1, \ldots, K,$$

for some $\varepsilon_b, \varepsilon_{e,1}, \ldots, \varepsilon_{e,K} > 0$.

The proposed robust SRM formulation is as follows:

$$R^\star(P) = \max_{\substack{\mathbf{W}\succeq\mathbf{0},\\ \mathrm{Tr}(\mathbf{W})\leq P}} \psi(\mathbf{W}) \tag{17}$$

where $\psi(\mathbf{W})$ is the worst-case secrecy rate function, defined by

$$\psi(\mathbf{W}) = \min_{k=1,\ldots,K} \psi_k(\mathbf{W}), \tag{18}$$

$$\psi_k(\mathbf{W}) = \min_{\substack{\mathbf{h}\in\mathcal{B}_b,\\ \mathbf{G}_k\in\mathcal{B}_{e,k}}} \log(1+\mathbf{h}^H\mathbf{W}\mathbf{h}) - \log\det(\mathbf{I}+\mathbf{G}_k^H\mathbf{W}\mathbf{G}_k), \tag{19}$$

$$\mathcal{B}_b = \{\ \mathbf{h}\in\mathbb{C}^{N_t}\ \mid\ \|\mathbf{h}-\bar{\mathbf{h}}\|_2 \leq \varepsilon_b\ \}, \tag{20}$$

$$\mathcal{B}_{e,k} = \{\ \mathbf{G}_k\in\mathbb{C}^{N_t\times N_{e,k}}\ \mid\ \|\mathbf{G}_k-\bar{\mathbf{G}}_k\|_F \leq \varepsilon_{e,k}\ \}. \tag{21}$$

The function $\psi_k(\cdot)$ represents the worst secrecy-rate function among all channel possibilities, for the kth Eve. The resulting design (17) is a conservative one; from its formulation we see that the secrecy rate will be guaranteed to be no less than the worst-case optimum $R^\star(P)$ for any channel possibilities (described by $\mathcal{B}_b$, $\mathcal{B}_{e,k}$).

Based on the same philosophy as in the last section, we can also formulate a worst-case robust SRC design:

$$\begin{aligned} P^\star(R) = \min_{\mathbf{W}\succeq\mathbf{0}} \quad & \mathrm{Tr}(\mathbf{W}) \\ \text{s.t.} \quad & \psi(\mathbf{W}) \geq R, \end{aligned} \tag{22}$$

i.e., minimizing the transmit power while satisfying a secrecy rate specification R in the worst-case sense. This robust SRC problem is interesting in its own rights, and, like the perfect-CSI solution established in the last section, solving the robust SRC problem will provide us with a crucial key to solving the robust SRM problem.

B. The Robust Secrecy-Rate Constrained Problem

We consider the robust SRC (R-SRC) problem (22) in this subsection, where we aim to develop an SDP solution to R-SRC optimization. From (18)-(22), Problem (22) can be expressed as

$$\begin{aligned} P^\star(R) = \min_{\mathbf{W}\succeq\mathbf{0}} \quad & \mathrm{Tr}(\mathbf{W}) \\ \text{s.t.} \quad & 2^{-R} \geq \frac{\max\limits_{\mathbf{G}_k\in\mathcal{B}_{e,k}} \det(\mathbf{I}+\mathbf{G}_k^H\mathbf{W}\mathbf{G}_k)}{\min\limits_{\mathbf{h}\in\mathcal{B}_b} 1+\mathbf{h}^H\mathbf{W}\mathbf{h}}, \\ & k=1,\ldots,K. \end{aligned} \tag{23}$$

Our approach to solving (23) is somehow reminiscent of its non-robust counterpart in Section III-A. We use Lemma 1 to relax the constraints in (23), and obtain the following relaxed problem:

$$\begin{aligned} P^\star(R) \geq P^\star_{relax}(R) = \min_{\mathbf{W}\succeq\mathbf{0}} \quad & \mathrm{Tr}(\mathbf{W}) \\ \text{s.t.} \quad & 2^{-R} \geq \frac{\max\limits_{\mathbf{G}_k\in\mathcal{B}_{e,k}} 1+\mathrm{Tr}(\mathbf{G}_k^H\mathbf{W}\mathbf{G}_k)}{\min\limits_{\mathbf{h}\in\mathcal{B}_b} 1+\mathbf{h}^H\mathbf{W}\mathbf{h}}, \\ & k=1,\ldots,K. \end{aligned} \tag{24}$$

Our goals are then to turn (24) to a tractable convex problem, and to show that the relaxation in (24) is tight by proving the rank-one solution structure of (24).

In fact, the relaxed R-SRC problem (24) can be recast as an SDP. To do so, the first step is to reformulate (24) as

$$\min_{\mathbf{W}\succeq\mathbf{0},\theta} \ \mathrm{Tr}(\mathbf{W}) \tag{25a}$$

$$\text{s.t.} \ \min_{\mathbf{h}\in\mathcal{B}_b} 1+\mathbf{h}^H\mathbf{W}\mathbf{h} \geq \theta, \tag{25b}$$

$$2^{-R}\theta \geq \max_{\mathbf{G}_k\in\mathcal{B}_{e,k}} 1+\mathrm{Tr}(\mathbf{G}_k^H\mathbf{W}\mathbf{G}_k), \tag{25c}$$

$$k=1,\ldots,K,$$

where we have added a slack variable θ to decouple the fractional functions in the original constraints in (24). Problem (25) is already a convex problem in principle, but with semi-infinite constraints as seen in (25b) and (25c). To make the problem more tractable to solve and analyze, the second step is to turn (25b) and (25c) to linear matrix inequalities (LMIs), using the $\mathcal{S}$-procedure:

Lemma 2 ($\mathcal{S}$-procedure [35]) *Let*

$$f_k(\mathbf{x}) = \mathbf{x}^H\mathbf{A}_k\mathbf{x} + 2\mathrm{Re}\{\mathbf{b}_k^H\mathbf{x}\} + c_k$$

for $k=1,2$, where $\mathbf{A}_k\in\mathbb{H}^n$, $\mathbf{b}_k\in\mathbb{C}^n$, $c_k\in\mathbb{R}$. The implication $f_1(\mathbf{x})\leq 0 \Rightarrow f_2(\mathbf{x})\leq 0$ holds if and only if there exists $\mu\geq 0$ such that

$$\mu\begin{bmatrix}\mathbf{A}_1 & \mathbf{b}_1\\ \mathbf{b}_1^H & c_1\end{bmatrix} - \begin{bmatrix}\mathbf{A}_2 & \mathbf{b}_2\\ \mathbf{b}_2^H & c_2\end{bmatrix} \succeq \mathbf{0},$$

provided that there exists a point $\hat{\mathbf{x}}$ such that $f_1(\hat{\mathbf{x}})<0$.

To apply the $\mathcal{S}$-procedure to the constraint (25b), we substitute the representation $\mathbf{h}=\bar{\mathbf{h}}+\Delta\mathbf{h}$ into (25b) and re-express (25b) as:

$$\Delta\mathbf{h}^H\Delta\mathbf{h}\leq\varepsilon_b^2 \Longrightarrow \Delta\mathbf{h}^H\mathbf{W}\Delta\mathbf{h} + 2\mathrm{Re}\{\bar{\mathbf{h}}^H\mathbf{W}\Delta\mathbf{h}\} + \bar{\mathbf{h}}^H\mathbf{W}\bar{\mathbf{h}} + 1 - \theta \geq 0. \tag{26}$$

Using the $\mathcal{S}$-procedure, we transform (26) to an LMI

$$\mathbf{T}_b(\mathbf{W},\lambda_b,\theta) \triangleq \begin{bmatrix} \lambda_b \mathbf{I}_{N_t} + \mathbf{W} & \mathbf{W}\bar{\mathbf{h}} \\ \bar{\mathbf{h}}^H \mathbf{W} & -\lambda_b \varepsilon_b^2 - \theta + \bar{\mathbf{h}}^H \mathbf{W} \bar{\mathbf{h}} + 1 \end{bmatrix} \succeq \mathbf{0}, \tag{27}$$

for some $\lambda_b \geq 0$. Similarly, (25c) is equivalent to the following implication:

$$\Delta \boldsymbol{g}_k^H \Delta \boldsymbol{g}_k \leq \varepsilon_{e,k}^2 \Longrightarrow \Delta \boldsymbol{g}_k^H \boldsymbol{\mathcal{W}}_k \Delta \boldsymbol{g}_k + 2\mathrm{Re}\{\bar{\boldsymbol{g}}_k^H \boldsymbol{\mathcal{W}}_k \Delta \boldsymbol{g}_k\} + \bar{\boldsymbol{g}}_k^H \boldsymbol{\mathcal{W}}_k \bar{\boldsymbol{g}}_k + 1 - 2^{-R}\theta \leq 0, \tag{28}$$

where $\boldsymbol{\mathcal{W}}_k = \mathbf{I}_{N_{e,k}} \otimes \mathbf{W}$ and $\bar{\boldsymbol{g}}_k = \mathrm{vec}(\bar{\mathbf{G}}_k)$. By the $\mathcal{S}$-procedure, the above implication can be re-expressed as the following LMI:

$$\mathbf{T}_{e,k}(\mathbf{W},\lambda_{e,k},\theta) \triangleq \begin{bmatrix} \lambda_{e,k} \mathbf{I}_{N_{e,k} N_t} - \boldsymbol{\mathcal{W}}_k & -\boldsymbol{\mathcal{W}}_k \bar{\boldsymbol{g}}_k \\ -\bar{\boldsymbol{g}}_k^H \boldsymbol{\mathcal{W}}_k & -\lambda_{e,k}\varepsilon_{e,k}^2 - \bar{\boldsymbol{g}}_k^H \boldsymbol{\mathcal{W}}_k \bar{\boldsymbol{g}}_k + 2^{-R}\theta - 1 \end{bmatrix} \succeq \mathbf{0}, \tag{29}$$

for some $\lambda_{e,k} \geq 0$, $k = 1, \ldots, K$. Substituting (27) and (29) back into (25), we obtain the following SDP

$$P_{relax}^{\star}(R) = \min_{\mathbf{W},\theta,\lambda_b,\boldsymbol{\lambda}_e} \ \mathrm{Tr}(\mathbf{W}) \tag{30a}$$

$$\text{s.t. } \mathbf{T}_b(\mathbf{W},\lambda_b,\theta) \succeq \mathbf{0}, \tag{30b}$$

$$\mathbf{T}_{e,k}(\mathbf{W},\lambda_{e,k},\theta) \succeq \mathbf{0}, \ k = 1, \ldots, K, \tag{30c}$$

$$\mathbf{W} \succeq \mathbf{0}, \ \lambda_b \geq 0, \ \lambda_{e,k} \geq 0, \ k = 1, \ldots, K. \tag{30d}$$

where $\boldsymbol{\lambda}_e = [\ \lambda_{e,1}, \ldots, \lambda_{e,K}\ ]^T$. The SDP (30), as an equivalent form of the relaxed R-SRC problem, can be solved conveniently by available SDP solvers. In addition to this, the problem structures of (30) enable us to analyze the solution optimality of the relaxed R-SRC problem via the KKT conditions:

Proposition 3 *Consider the relaxed R-SRC problem* (30) *for the case of* $R > 0$*, Also, suppose that problem* (30) *is feasible. Then, the optimal solution of* (30) *must be of rank one and unique.*

It is interesting to note that the end results of Proposition 3 are exactly the same as those of its non-robust counterpart, Proposition 1. However, to prove Proposition 3 is considerably more complicated, owing to the more complex LMIs in (30b) and (30c). The proof of Proposition 3 is given in Appendix C.

We complete this subsection by using Proposition 3 to verify that the relaxed R-SRC problem (30) is tight:

Corollary 2 *Consider the R-SRC problem* (23) *for the case of* $R > 0$*, and suppose that problem* (23) *is feasible. The relaxed R-SRC problem* (30) *exactly solves the R-SRC problem, in the sense that the*

optimal solutions of (23) *and* (30) *are equivalent to one another. Moreover, the optimal R-SRC solution is unique and of rank one.*

Proof: The proof is essentially identical to that of Corollary 1, and thus is omitted for brevity. ■

C. The Robust Secrecy-Rate Maximization Problem

With the R-SRC results established in the previous subsection, we are now ready to develop an SDP solution to the robust SRM (R-SRM) problem (17). Problem (17) can be expressed as

$$\gamma^\star(P) = \min_{\substack{\mathbf{W}\succeq\mathbf{0},\\ \mathrm{Tr}(\mathbf{W})\leq P}} \max_{k=1,\ldots,K} \frac{\max\limits_{\mathbf{G}_k\in\mathcal{B}_{e,k}} \det(\mathbf{I}+\mathbf{G}_k^H\mathbf{W}\mathbf{G}_k)}{\min\limits_{\mathbf{h}\in\mathcal{B}_b} 1+\mathbf{h}^H\mathbf{W}\mathbf{h}} \tag{31}$$

where $0<\gamma^\star(P)\leq 1$. Applying Lemma 1 to (31) yields the following relaxed R-SRM problem

$$\gamma^\star(P) \geq \gamma^\star_{relax}(P) = \min_{\substack{\mathbf{W}\succeq\mathbf{0},\\ \mathrm{Tr}(\mathbf{W})\leq P}} \max_{k=1,\ldots,K} \frac{\max\limits_{\mathbf{G}_k\in\mathcal{B}_{e,k}} 1+\mathrm{Tr}(\mathbf{G}_k^H\mathbf{W}\mathbf{G}_k)}{\min\limits_{\mathbf{h}\in\mathcal{B}_b} 1+\mathbf{h}^H\mathbf{W}\mathbf{h}}. \tag{32}$$

We again investigate two issues: the tightness of the relaxed R-SRM problem, and the possibility of converting (32) to a convex problem.

The relaxed R-SRM problem is tight. We show the following:

Theorem 2 *Consider the R-SRM problem* (31) *for the case of* $0<\gamma^\star(P)<1$. *The relaxed R-SRM problem* (32) *exactly solves the R-SRM problem, in the sense that the optimal solutions of* (31) *and* (32) *are equivalent to one another. Moreover, the optimal R-SRM solution is unique and of rank one.*

Proof: The proof of Theorem 2 is essentially the same as that of its non-robust counterpart, Theorem 1, and here we provide only the outline. The idea is to consider the relaxed R-SRC problem

$$\begin{aligned} \min_{\mathbf{W}\succeq\mathbf{0}} \quad & \mathrm{Tr}(\mathbf{W}) \\ \text{s.t.} \quad & \gamma^\star_{relax}(P) \geq \frac{\max\limits_{\mathbf{G}_k\in\mathcal{B}_{e,k}} 1+\mathrm{Tr}(\mathbf{G}_k^H\mathbf{W}\mathbf{G}_k)}{\min\limits_{\mathbf{h}\in\mathcal{B}_b} 1+\mathbf{h}^H\mathbf{W}\mathbf{h}}, \\ & k=1,\ldots,K. \end{aligned} \tag{33}$$

It is shown that the optimal solutions of (32) and (33) are equivalent to one another, by following the same procedure as in Appendix B. The solution equivalence of (32) and (33), together with Proposition 3, enable us to deduce that (32) has a unique rank-one solution. In the same spirit as the proof of Corollary 1, the unique rank-one solution characteristic of (32) further implies that $\gamma^\star(P)=\gamma^\star_{relax}(P)$

(recall Lemma 1), and that the solution of (32) has to be the solution of (31), and vice versa. ■

The relaxed (actually, equivalent) R-SRM problem (32) can be transformed to an SDP. By employing the Charnes-Cooper transformation and $\mathcal{S}$-procedure, and by some careful manipulations, we show that

Proposition 4 *Problem* (32) *is equivalent to the following SDP*

$$\min_{\mathbf{Z},\xi,\tau,\lambda_b,\boldsymbol{\lambda}_e} \ \tau \tag{34a}$$

$$\text{s.t. } \mathbf{M}_b(\mathbf{Z},\lambda_b,\xi) \succeq \mathbf{0}, \tag{34b}$$

$$\mathbf{M}_{e,k}(\mathbf{Z},\lambda_{e,k},\xi,\tau) \succeq \mathbf{0},\ k=1,\ldots,K, \tag{34c}$$

$$\mathrm{Tr}(\mathbf{Z}) \leq \xi P, \tag{34d}$$

$$\mathbf{Z} \succeq \mathbf{0},\ \xi \geq 0,\ \lambda_b \geq 0,\ \lambda_{e,k} \geq 0,\ k=1,\ldots,K, \tag{34e}$$

where $\boldsymbol{\lambda}_e = [\ \lambda_{e,1},\ldots,\lambda_{e,K}\ ]^T$*,*

$$\mathbf{M}_b(\mathbf{Z},\lambda_b,\xi) \triangleq \begin{bmatrix} \lambda_b \mathbf{I}_{N_t} + \mathbf{Z} & \mathbf{Z}\bar{\mathbf{h}} \\ \bar{\mathbf{h}}^H\mathbf{Z} & \bar{\mathbf{h}}^H\mathbf{Z}\bar{\mathbf{h}} + \xi - \lambda_b\varepsilon_b^2 - 1 \end{bmatrix},$$

$$\mathbf{M}_{e,k}(\mathbf{Z},\lambda_{e,k},\xi,\tau) \triangleq \begin{bmatrix} \lambda_{e,k}\mathbf{I}_{N_{e,k}N_t} - \boldsymbol{\mathcal{Z}}_k & -\boldsymbol{\mathcal{Z}}_k\bar{\boldsymbol{g}}_k \\ -\bar{\boldsymbol{g}}_k^H\boldsymbol{\mathcal{Z}}_k & -\lambda_{e,k}\varepsilon_{e,k}^2 - \xi + \tau - \bar{\boldsymbol{g}}_k^H\boldsymbol{\mathcal{Z}}_k\bar{\boldsymbol{g}}_k \end{bmatrix},$$

and $\boldsymbol{\mathcal{Z}}_k = \mathbf{I}_{N_{e,k}} \otimes \mathbf{Z}$*. Specifically, Problems* (32) *and* (34) *are equivalent through the relation* $\mathbf{W} = \mathbf{Z}/\xi$*.*

We delegate the proof of Proposition 4 to Appendix D, since the key ideas behind the proof, the Charnes-Cooper transformation and $\mathcal{S}$-procedure, have been demonstrated in the preceding development.

In summary, we have shown that the nonconvex R-SRM problem (31) can be equivalently solved by solving the convex SDP (34); see Theorem 2 and Proposition 4.

Recall that in the perfect CSI scenario studied in the previous section, transmit beamforming is shown to be the optimal transmit strategy for the SRC and SRM designs in general. This physical result remains valid for the worst-case robust SRC and SRM designs, as indicated in Corollary 2 and Theorem 2.

V. Simulation Results

We provide simulation results to illustrate the secrecy-rate performance gains of the proposed SDP solutions compared to some other existing methods. We will first consider the perfect CSI case in the first subsection, and then the imperfect CSI case in the second subsection.

A. The Perfect CSI Case

The results to be presented in this subsection are based on the following simulation settings, unless specified: At Alice, the number of transmit antennas is $N_t = 10$, and the average transmit power limit is $P = 3\,\text{dB}$. Three Eves are present ($K = 3$), and their numbers of receive antennas are $N_{e,1} = \ldots = N_{e,K} = 3$. Perfect CSIs are assumed. At each trial of the simulations, Bob's channel $\mathbf{h}$ is randomly generated following an independent and identically distributed (i.i.d.) complex Gaussian distribution with zero mean and unit variance. Similarly, each Eve's channel $\mathbf{G}_k$ is randomly generated following an i.i.d. complex Gaussian distribution with zero mean and variance ρ_e^2. We fix $\rho_e^2 = 1$, if not mentioned. The simulation results were obtained based on an average of 1000 independent trials.

The following transmit designs are tested in our simulations: the proposed SDP solution (16) to solving the SRM problem (5), the projected-MRT method described in Section II-B, and a simple method called *plain-MRT* here. In plain-MRT we choose Bob's channel direction, $\mathbf{h}/\|\mathbf{h}\|$, as the transmit weight. Specifically, plain-MRT sets $\mathbf{W} = (P/\|\mathbf{h}\|^2)\mathbf{h}\mathbf{h}^H$ if the corresponding secrecy rate is positive; and $\mathbf{W} = \mathbf{0}$ otherwise. Plain-MRT is a suboptimal, arguably weak, method since it ignores the presence of Eves. It is nonetheless interesting to examine its secrecy-rate performance relative to SDP.

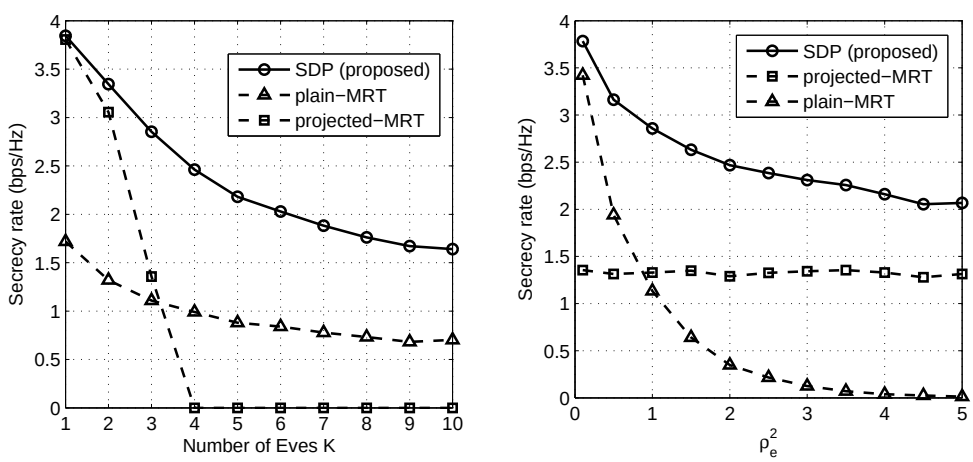

(a) (b)

Fig. 2. Secrecy rates of the various methods versus (a) the number of Eves, and (b) the average channel strength of Eves.

1) Secrecy rates versus the number of Eves: Fig. 2(a) shows the secrecy rate behaviors of the various methods when we increase the number of Eves K. We can see that the proposed SDP method yields better performance than the two other methods over the whole range of K tested. The secrecy rate of

projected-MRT is able to approach that of SDP for $K \leq 2$, but becomes zero for $K > 3$; the latter case is when the degree of freedom of all Eves combined, $\sum_{k=1}^{K} N_{e,k} = 3K$, is higher than the transmit degree of freedom. By contrast, the SDP method is able to provide a secrecy rate of higher than 1.5bps/Hz even with $K = 10$.

2) Secrecy rates versus Eves' received signal strength: We investigate the impact of 'near-far' effects on the secrecy rate behaviors; i.e., how the various methods perform when Eves' received signal strength, characterized by ρ_e^2, changes. Fig. 2(b) shows the secrecy rates of the various methods with respect to ρ_e^2. Note that $\rho_e > 1$ means that every Eve has a stronger received signal strength than Bob, while $\rho_e < 1$ means the vice versa. The following two phenomenons are observed for the MRT methods: First, plain-MRT approaches SDP for small ρ_e^2, which makes sense since one may simply ignore weak Eves in the transmit design. Second, projected-MRT has its secrecy rate invariant to ρ_e^2, which is due to its nulling process. This means that projected-MRT can cope with strong Eves rather effectively. Fig. 2(b) also illustrates that the proposed SDP methods provide better performance than the two MRT methods, especially for $\rho_e^2 \geq 0.5$.

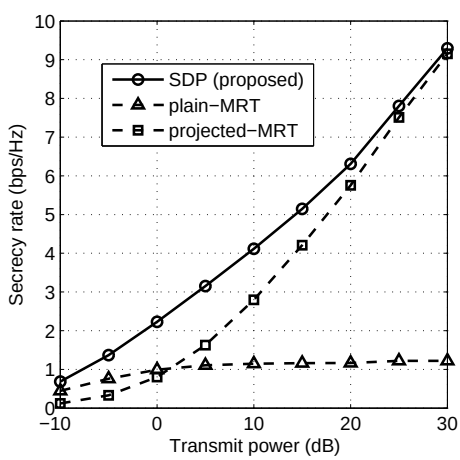

Fig. 3. Secrecy rate versus transmit power.

3) Secrecy rates versus the transmit power: We are interested in evaluating the secrecy rate performance of the various methods with respect to the transmit power budget P. The results are displayed in Fig. 3. Interestingly, we see that the secrecy rate of SDP appears to be approached by that of plain-MRT for small P, and by that of projected-MRT for large P.

B. The Imperfect CSI Case

The simulation settings in the imperfect CSI case are generally identical to those of the perfect CSI case above, except that the average power limit is increased to $P = 20$dB. Regarding the imperfect CSI effects, we define the following channel uncertainty ratios:

$$\alpha_{e,k} = \frac{\varepsilon_{e,k}}{\sqrt{\mathrm{E}\{\|\bar{\mathbf{G}}_k\|_F^2\}}}, \quad k = 1, \ldots, K$$

$$\alpha_b = \frac{\varepsilon_b}{\sqrt{\mathrm{E}\{\|\bar{\mathbf{h}}\|^2\}}},$$

and use them to control the amount of channel uncertainties in the simulations. We fix $\alpha_{e,1} = \ldots = \alpha_{e,K} \triangleq \alpha_e$. We will choose $\alpha_b = 0.03$, $\alpha_e = 0.1$, unless specified. The performance measure is the worst-case secrecy rate defined in (17)-(21). This performance measure does not have a closed form, but can be computed via SDP; the details are described in Appendix E.

We evaluate the performance of the robust SDP method developed in Section IV-C, the non-robust SDP method (in Section III-B), projected-MRT, and plain-MRT. The latter three methods use the presumed CSIs $\bar{\mathbf{h}}, \bar{\mathbf{G}}_1, \ldots, \bar{\mathbf{G}}_K$ to perform transmit designs in the simulations, and then we evaluate the resultant worst-case secrecy rates.

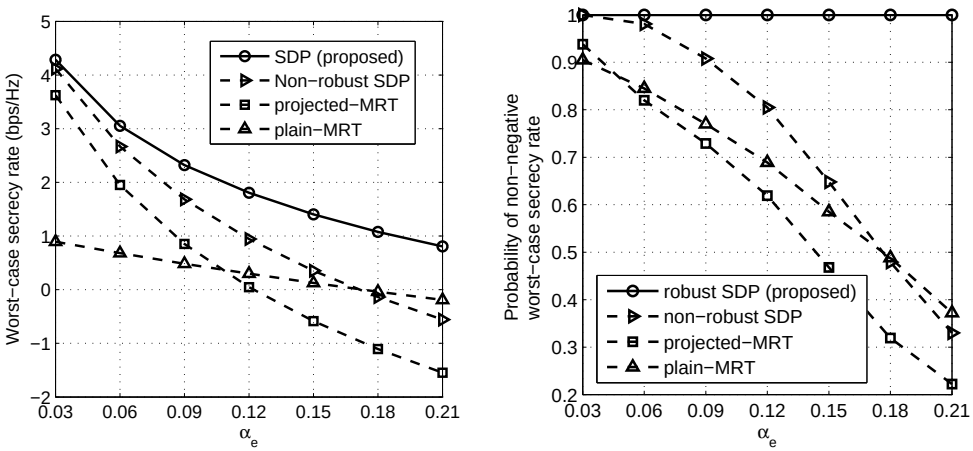

(a) (b)

Fig. 4. Secrecy rate performance with imperfect CSI. (a) Worst-case secrecy rate versus Eves' channel uncertainty ratio; (b) Probability of non-negative worst-case secrecy rate versus Eves' channel uncertainty ratio.

1) Secrecy rate performance versus Eve's channel uncertainty ratio: Fig. 4(a) presents the worst-case secrecy rates of the various methods versus Eve's channel uncertainty ratio α_e. As seen in the figure, the

robust SDP method yields the best worst-case secrecy rate among all the methods, especially when α_e is large. Moreover, we observe a peculiar behavior— that non-robust SDP, projected-MRT, and plain-MRT yield negative worst-case secrecy rates for $\alpha_e > 0.18$. That is because these perfect-CSI-based methods aim to provide non-negative secrecy rate results for the presumed CSIs, but not for the actual CSIs. To get a better idea of how sensitive the non-robust methods can be in the presence of imperfect CSIs, in Fig. 4(b) we show the probability of non-negative secrecy rate; i.e., the chance that a method gives non-negative worst-case secrecy rate under the 1000 independent trials. One can see that the robust method always guarantees a non-negative secrecy rate (which is expected from its design formulation), and that the non-robust methods violate non-negative secrecy rate quite seriously especially for large α_e.

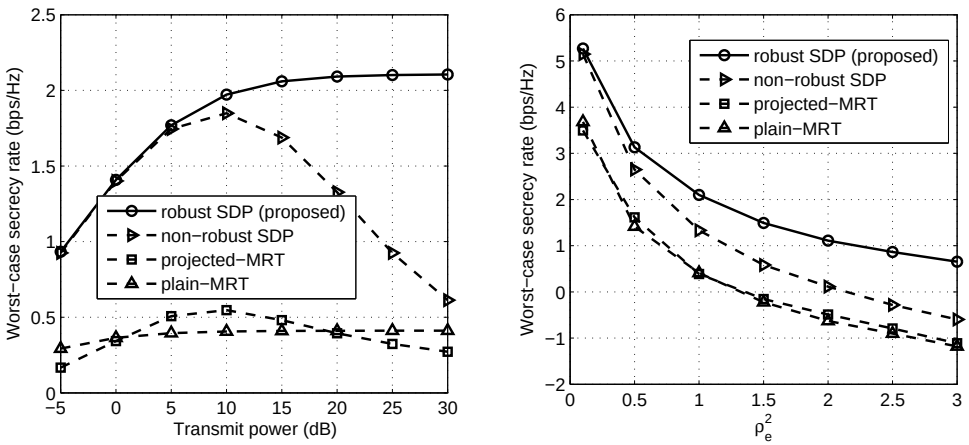

(a) (b)

Fig. 5. Secrecy rate performance with imperfect CSI. (a) Worst-case secrecy rate versus transmit power; (b) Worst-case secrecy rate versus Eves' received signal strength.

2) Worst-case secrecy rates versus transmit power, and Eves' received signal strength: More results are shown to demonstrate the robustness of the proposed robust SDP method. Fig. 5(a) plots the worst-case secrecy rates of the various methods against the transmit power P. As seen, the worst-case secrecy rate performance of the robust SDP method is better than those of the other methods. Moreover, we observe that for non-robust SDP and projected-MRT, keeping on increasing P ends up decreasing the worst-case secrecy rate. That is because increasing the power may also help improve eavesdroppers' receptions, if the transmit design does not take channel uncertainties into account. Fig. 5(b) plots the worst-case secrecy rates against ρ_e^2. Again, the robust SDP method is seen to yield better worst-case secrecy rates than the other methods.

VI. Conclusion and Discussion

To conclude, this paper has addressed the transmit covariance design problem of maximizing the MISO secrecy rate overheard by multiple multi-antenna eavesdroppers, using an effective SDP approach. Both perfect and imperfect CSI cases are considered in our designs. Moreover, we have shown by analysis that transmit beamforming is generally the secrecy-rate optimal strategy for the considered scenarios. As illustrated by the simulations, the proposed SDP solutions outperform some other existing methods.

Before closing this paper, we should mention that some concurrent research studies, e.g., [12], [14], [18], [23], have demonstrated that adding artificial noise (AN) in the transmit design is quite effective in degrading Eves' receptions. Hence, a meaningful future direction would be to extend this work to the AN-aided case, optimizing the transmit design and AN jointly for the maximum secrecy rate. The resultant design optimization is expected to be more difficult than those tackled here, and it would be interesting to see how the results in this paper may be used to help overcome the arising design challenges.

Appendix

A. Proof of Proposition 1

For Problem (11), let us first write out its Lagrangian function:

$$\mathcal{L}\big(\mathbf{W},\mathbf{Y},\boldsymbol{\mu}\big) = \mathrm{Tr}(\mathbf{W}) - \mathrm{Tr}(\mathbf{W}\mathbf{Y}) + \sum_{k=1}^{K}\mu_k\left(2^R(1+\mathrm{Tr}(\mathbf{G}_k\mathbf{G}_k^H\mathbf{W})) - \mathrm{Tr}(\mathbf{h}\mathbf{h}^H\mathbf{W}) - 1\right),$$

where $\boldsymbol{\mu} = [\ \mu_1,\ldots,\mu_K\ ]^T$, $\mu_1,\ldots,\mu_K \geq 0$ are the Lagrangian dual variable for the minimum secrecy-rate constraints, and $\mathbf{Y} \in \mathbb{H}_+^{N_t}$ is the Lagrangian dual variable for the constraint $\mathbf{W} \succeq \mathbf{0}$. The corresponding KKT conditions are shown to be

$$\mathbf{Y} = \mathbf{I} + 2^R\textstyle\sum_{k=1}^K \mu_k\mathbf{G}_k\mathbf{G}_k^H - (\sum_{k=1}^K \mu_k)\mathbf{h}\mathbf{h}^H, \tag{35a}$$

$$\mathbf{Y}\mathbf{W} = \mathbf{0}, \tag{35b}$$

$$1 + \mathrm{Tr}(\mathbf{h}\mathbf{h}^H\mathbf{W}) \geq 2^R(1+\mathrm{Tr}(\mathbf{G}_k\mathbf{G}_k^H\mathbf{W})), \quad \forall k \tag{35c}$$

$$\mathbf{W} \succeq \mathbf{0}, \quad \mathbf{Y} \succeq \mathbf{0}, \quad \mu_k \geq 0, \quad k = 1,\ldots,K. \tag{35d}$$

Note that in general, problem (11) satisfies Slater's constraint qualification condition: If problem (11) has a feasible point, then one can prove, by construction, that there exists a strictly feasible point for problem (11). As a result, strong duality holds and the KKT conditions are the necessary conditions for a primal-dual point $\big(\mathbf{W},\mathbf{Y},\boldsymbol{\mu}\big)$ to be optimal.

The key to showing the rank-one structure of $\mathbf{W}$ lies in (35a). Let

$$\mathbf{B} = \mathbf{I} + 2^R \sum_{k=1}^K \mu_k \mathbf{G}_k \mathbf{G}_k^H.$$

We see that $\mathbf{B}$ is positive definite, and thus has full rank. By letting $\rho = \sum_{k=1}^K \mu_k \geq 0$ and by denoting $\mathbf{B}^{1/2}$ as a positive definite square root of $\mathbf{B}$, we have that

$$\begin{aligned}\mathrm{rank}(\mathbf{Y}) &\equiv \mathrm{rank}(\mathbf{B}^{-1/2}\mathbf{Y}\mathbf{B}^{-1/2}) \\ &= \mathrm{rank}(\mathbf{I} - \rho(\mathbf{B}^{-1/2}\mathbf{h})(\mathbf{B}^{-1/2}\mathbf{h})^H) \geq N_t - 1,\end{aligned}$$

i.e., $\mathrm{rank}(\mathbf{Y})$ is either N_t or $N_t - 1$. For $\mathrm{rank}(\mathbf{Y}) = N_t$, (35b) can only be satisfied by $\mathbf{W} = \mathbf{0}$. However, $\mathbf{W} = \mathbf{0}$ violates (35c) when $R > 0$. For $\mathrm{rank}(\mathbf{Y}) = N_t - 1$, (35b) is achieved only when $\mathbf{W}$ lies in the nullspace of $\mathbf{Y}$, the dimension of which is one. This means that any optimal $\mathbf{W}$ must be of rank one.

The proof above has shown that any primal optimal solution $\mathbf{W}$ of (11) must be of rank one for $R > 0$. Next, we consider the uniqueness of the optimal $\mathbf{W}$. Suppose that there are two distinct optimal solutions, say $\mathbf{W}_1$ and $\mathbf{W}_2$, which satisfy $\mathrm{rank}(\mathbf{W}_1) = \mathrm{rank}(\mathbf{W}_2) = 1$. It can be easily shown that the subspaces spanned by $\mathbf{W}_1$ and $\mathbf{W}_2$ must be different in order for $\mathbf{W}_1$ and $\mathbf{W}_2$ to be distinct; i.e., $\mathcal{R}(\mathbf{W}_1) \neq \mathcal{R}(\mathbf{W}_2)$ where $\mathcal{R}(\cdot)$ denotes the range space of the argument. As a basic result in convex optimization, any $\mathbf{W}_3 = \beta\mathbf{W}_1 + (1-\beta)\mathbf{W}_2$, for $\beta \in (0,1)$, is also an optimal solution [35]. Since $\mathbf{W}_1$ and $\mathbf{W}_2$ are distinct, it can be easily shown that $\mathbf{W}_3$ is of rank two, which violates the necessity that any optimal $\mathbf{W}$ must be of rank one. In other words, we must have one optimal $\mathbf{W}$ only.

B. Proof of Theorem 1

For ease of exposition, we restate Problems (13) and (14) in the following equations, respectively

$$\begin{aligned}\gamma_{relax}^\star = \min_{\mathbf{W}\succeq\mathbf{0}} \quad & \phi(\mathbf{W}) \\ \text{s.t.} \quad & \mathrm{Tr}(\mathbf{W}) \leq P\end{aligned} \tag{36}$$

and

$$\begin{aligned}\min_{\mathbf{W}\succeq\mathbf{0}} \quad & \mathrm{Tr}(\mathbf{W}) \\ \text{s.t.} \quad & \gamma_{relax}^\star \geq \phi(\mathbf{W})\end{aligned} \tag{37}$$

where, with a slight abuse of notations but for notational simplicity, $\gamma_{relax}^\star(P)$ is replaced by $\gamma_{relax}^\star$, and

$$\phi(\mathbf{W}) = \max_{k=1,\ldots,K} \frac{1 + \mathrm{Tr}(\mathbf{G}_k^H \mathbf{W} \mathbf{G}_k)}{1 + \mathbf{h}^H \mathbf{W} \mathbf{h}}$$

is used to denote the objective function of (36).

Our proof is divided into three steps: First, we prove that an optimal solution to Problem (37) is also an optimal solution to Problem (36); second, we prove the converse; finally, we utilize Proposition 1 to establish our claim in Theorem 1.

Step 1: Let $\bar{\mathbf{W}}$ be an optimal solution of (36), and $\hat{\mathbf{W}}$ be an optimal solution of (37). By noting that $\bar{\mathbf{W}}$ is also feasible to (37), we have that

$$P \geq \mathrm{Tr}(\bar{\mathbf{W}}) \geq \mathrm{Tr}(\hat{\mathbf{W}}).$$

Hence, $\hat{\mathbf{W}}$ is also feasible to (36). This further implies that $\phi(\hat{\mathbf{W}}) \geq \gamma^{\star}_{relax}$. Moreover, as an optimal solution of (37), $\hat{\mathbf{W}}$ must satisfy the constraint in (37); i.e., $\gamma^{\star}_{relax} \geq \phi(\hat{\mathbf{W}})$. We therefore have $\phi(\hat{\mathbf{W}}) = \gamma^{\star}_{relax}$; in other words, $\hat{\mathbf{W}}$ is optimal to (36).

Step 2: Suppose that $\bar{\mathbf{W}}$ is optimal to Problem (36), but not optimal to (37). Since $\bar{\mathbf{W}}$ is feasible to (37), the following relation holds

$$\mathrm{Tr}(\hat{\mathbf{W}}) < \mathrm{Tr}(\bar{\mathbf{W}}) \leq P.$$

Since $\mathrm{Tr}(\hat{\mathbf{W}}) < P$, we can construct another point $\breve{\mathbf{W}} = \alpha_0 \hat{\mathbf{W}}$ with $\alpha_0 > 1$, such that $\mathrm{Tr}(\breve{\mathbf{W}}) = P$; i.e., $\breve{\mathbf{W}}$ is feasible to Problem (36). Now, consider the following function

$$f(\alpha) := \phi(\alpha \hat{\mathbf{W}}) = \frac{1 + \alpha \max\limits_{k=1,\ldots,K} \mathrm{Tr}(\mathbf{G}_k^H \hat{\mathbf{W}} \mathbf{G}_k)}{1 + \alpha \mathbf{h}^H \hat{\mathbf{W}} \mathbf{h}}.$$

The function $f(\alpha)$ is strictly decreasing with respect to α: It can be verified that

$$f'(\alpha) = \frac{\max\limits_{k=1,\ldots,K} \mathrm{Tr}(\mathbf{G}_k^H \hat{\mathbf{W}} \mathbf{G}_k) - \mathbf{h}^H \hat{\mathbf{W}} \mathbf{h}}{(1 + \alpha \mathbf{h}^H \hat{\mathbf{W}} \mathbf{h})^2} < 0,$$

where the inequality above holds for $\mathbf{h}^H \hat{\mathbf{W}} \mathbf{h} > \max\limits_{k=1,\ldots,K} \mathrm{Tr}(\mathbf{G}_k^H \hat{\mathbf{W}} \mathbf{G}_k)$, which must be true for $\gamma^{\star}_{relax} \leq \gamma^{\star} < 1$. With the strictly decreasing property of $f(\alpha)$ and $\alpha_0 > 1$, we have that

$$\phi(\breve{\mathbf{W}}) = \phi(\alpha_0 \hat{\mathbf{W}}) = f(\alpha_0) < f(1) = \phi(\hat{\mathbf{W}}) = \gamma^{\star}_{relax}$$

which means that $\breve{\mathbf{W}}$ can achieve a lower objective value than $\hat{\mathbf{W}}$ in Problem (36). This contradicts the optimality of $\hat{\mathbf{W}}$ for Problem (36).

Step 3: So far, we have proven that Problems (36) and (37) have the same optimal solution set. Since $\gamma^{\star}_{relax} < 1$, by Proposition 1, we know that there is a unique rank-one optimal solution to Problem (37). Hence Problem (36) also admits a unique rank-one optimal solution. Moreover, this rank-one optimal solution fulfills the equality $\gamma^{\star} = \gamma^{\star}_{relax}$ (recall Lemma 1), thereby serving as an optimal solution to the original problem (12) as well. On the other hand, let $\mathbf{W}^{\star}$ be an optimal solution of (12). Since $\mathbf{W}^{\star}$ is feasible to Problem (36) and the relaxation is tight, i.e., $\gamma^{\star} = \gamma^{\star}_{relax}$, $\mathbf{W}^{\star}$ is optimal to Problem (36), too. This further implies that $\mathbf{W}^{\star}$ has to be unique and of rank one.

C. Proof of Proposition 3

The key to the proof lies in the KKT conditions. The Lagrangian function of Problem (30) is given by

$$\begin{aligned}\mathcal{L}(\boldsymbol{\mathcal{X}}) &= \mathrm{Tr}(\mathbf{W}) - \sum_{k=1}^{K} \mathrm{Tr}\big(\mathbf{T}_{e,k}(\mathbf{W}, \lambda_{e,k}, \theta)\mathbf{A}_{e,k}\big) \\ &\quad -\mathrm{Tr}\big(\mathbf{T}_b(\mathbf{W}, \lambda_b, \theta)\mathbf{A}_b\big) - \mathrm{Tr}(\mathbf{WS}) - \lambda_b\mu_b - \sum_{k=1}^{K} \lambda_{e,k}\mu_{e,k} \end{aligned} \tag{38}$$

where $\boldsymbol{\mathcal{X}} = \big\{\mathbf{W}, \mathbf{S}, \lambda_b, \boldsymbol{\lambda}_e, \theta, \mu_b, \boldsymbol{\mu}_e, \mathbf{A}_e, \mathbf{A}_b\big\}$ collects all the primal and dual variables, with $\boldsymbol{\lambda}_e = [\ \lambda_{e,1}, \ldots, \lambda_{e,K}\ ]^T$, $\boldsymbol{\mu}_e = [\ \mu_{e,1}, \ldots, \mu_{e,K}\ ]^T$, and $\mathbf{A}_e = \{\mathbf{A}_{e,k}\}_{k=1}^K$; $\mathbf{A}_{e,k} \in \mathbb{H}_+^{N_{e,k}N_t+1}$, $\mathbf{A}_b \in \mathbb{H}_+^{N_t+1}$, $\mathbf{S} \in \mathbb{H}_+^{N_t}$, $\mu_b \in \mathbb{R}_+$ and $\mu_{e,k} \in \mathbb{R}_+$ are dual variables associated with $\mathbf{T}_{e,k}$, $\mathbf{T}_b$, $\mathbf{W}$, λ_b and $\lambda_{e,k}$, respectively.

For ease of expression, we rewrite $\mathbf{T}_b(\mathbf{W}, \lambda_b, \theta)$ and $\mathbf{T}_{e,k}(\mathbf{W}, \lambda_{e,k}, \theta)$ as

$$\mathbf{T}_b(\mathbf{W}, \lambda_b, \theta) = \boldsymbol{\Gamma}_b(\lambda_b, \theta) + \mathbf{V}_b^H\mathbf{W}\mathbf{V}_b, \tag{39}$$

$$\mathbf{T}_{e,k}(\mathbf{W}, \lambda_{e,k}, \theta) = \boldsymbol{\Gamma}_{e,k}(\lambda_{e,k}, \theta) - \mathbf{V}_{e,k}^H\boldsymbol{\mathcal{W}}_k\mathbf{V}_{e,k}, \tag{40}$$

where

$$\boldsymbol{\Gamma}_b(\lambda_b, \theta) = \begin{bmatrix} \lambda_b\mathbf{I}_{N_t} & \mathbf{0} \\ \mathbf{0} & -\lambda_b\varepsilon_b^2 - \theta + 1 \end{bmatrix}, \quad \mathbf{V}_b = [\ \mathbf{I}_{N_t} \quad \bar{\mathbf{h}}\ ],$$

$$\boldsymbol{\Gamma}_{e,k}(\lambda_{e,k}, \theta) = \begin{bmatrix} \lambda_{e,k}\mathbf{I}_{N_tN_{e,k}} & \mathbf{0} \\ \mathbf{0} & -\lambda_{e,k}\varepsilon_{e,k}^2 + 2^{-R}\theta - 1 \end{bmatrix}, \quad \mathbf{V}_{e,k} = [\ \mathbf{I}_{N_tN_{e,k}} \quad \bar{\boldsymbol{g}}_k\ ].$$

Substituting (39) and (40) into (38), we obtain an alternate expression of the Lagrangian function

$$\begin{aligned}\mathcal{L}(\boldsymbol{\mathcal{X}}) &= \mathrm{Tr}(\mathbf{W}) + \sum_{k=1}^{K} \mathrm{Tr}\big(\boldsymbol{\mathcal{W}}_k\mathbf{V}_{e,k}\mathbf{A}_{e,k}\mathbf{V}_{e,k}^H\big) - \mathrm{Tr}\big(\mathbf{W}\mathbf{V}_b\mathbf{A}_b\mathbf{V}_b^H\big) \\ &\quad -\mathrm{Tr}(\mathbf{WS}) + \varphi\big(\lambda_b, \boldsymbol{\lambda}_e, \theta, \mu_b, \boldsymbol{\mu}_e, \mathbf{A}_e, \mathbf{A}_b\big), \\ &= \mathrm{Tr}(\mathbf{W}) + \sum_{k=1}^{K}\sum_{l=1}^{N_{e,k}} \mathrm{Tr}\big(\mathbf{W}\mathbf{B}_{e,k}^{(l,l)}\big) - \mathrm{Tr}\big(\mathbf{W}\mathbf{V}_b\mathbf{A}_b\mathbf{V}_b^H\big) \\ &\quad -\mathrm{Tr}(\mathbf{WS}) + \varphi\big(\lambda_b, \boldsymbol{\lambda}_e, \theta, \mu_b, \boldsymbol{\mu}_e, \mathbf{A}_e, \mathbf{A}_b\big), \end{aligned} \tag{41}$$

where $\mathbf{B}_{e,k}^{(l,l)} \in \mathbb{H}_+^{N_t}$ is a block submatrix of $\mathbf{V}_{e,k}\mathbf{A}_{e,k}\mathbf{V}_{e,k}^H$; specifically,

$$\mathbf{V}_{e,k}\mathbf{A}_{e,k}\mathbf{V}_{e,k}^H = \begin{bmatrix} \mathbf{B}_{e,k}^{(1,1)} & \ldots & \mathbf{B}_{e,k}^{(1,N_{e,k})} \\ \vdots & \ddots & \vdots \\ \mathbf{B}_{e,k}^{(N_{e,k},1)} & \ldots & \mathbf{B}_{e,k}^{(N_{e,k},N_{e,k})} \end{bmatrix} \in \mathbb{H}_+^{N_tN_{e,k}};$$

and $\varphi\big(\lambda_b, \boldsymbol{\lambda}_e, \theta, \mu_b, \boldsymbol{\mu}_e, \mathbf{A}_e, \mathbf{A}_b\big)$ collects the terms not related to $\mathbf{W}$ and $\mathbf{S}$, which are not important to the proof.

We consider only the KKT conditions relevant to the proof here:

$$\nabla_{\mathbf{W}}\mathcal{L}(\boldsymbol{\mathcal{X}}) = \mathbf{0}, \tag{42a}$$

$$\mathbf{T}_b(\mathbf{W}, \lambda_b, \theta)\mathbf{A}_b = \mathbf{0}, \tag{42b}$$

$$\mathbf{W}\mathbf{S} = \mathbf{0}, \tag{42c}$$

$$\lambda_b \geq 0,\ \mathbf{W} \succeq \mathbf{0},\ \mathbf{A}_b \succeq \mathbf{0},\ \mathbf{A}_{e,k} \succeq \mathbf{0}, \quad k = 1, \ldots, K. \tag{42d}$$

Using the expression (41), the KKT condition (42a) is obtained as follows:

$$\mathbf{I}_{N_t} + \sum_{k=1}^{K}\sum_{l=1}^{N_{e,k}} \mathbf{B}_{e,k}^{(l,l)} - \mathbf{V}_b\mathbf{A}_b\mathbf{V}_b^H - \mathbf{S} = \mathbf{0}. \tag{43}$$

Premultiplying the two sides of (43) by $\mathbf{W}$, and making use of (42c), we get

$$\mathbf{W}\Big(\mathbf{I}_{N_t} + \sum_{k=1}^{K}\sum_{l=1}^{N_{e,k}} \mathbf{B}_{e,k}^{(l,l)}\Big) = \mathbf{W}\mathbf{V}_b\mathbf{A}_b\mathbf{V}_b^H. \tag{44}$$

Now the following relation holds:

$$\begin{aligned}
\mathrm{rank}(\mathbf{W}) &= \mathrm{rank}\left(\mathbf{W}\Big(\mathbf{I}_{N_t} + \sum_{k=1}^{K}\sum_{l=1}^{N_{e,k}} \mathbf{B}_{e,k}^{(l,l)}\Big)\right) && \text{(45a)}\\
&= \mathrm{rank}(\mathbf{W}\mathbf{V}_b\mathbf{A}_b\mathbf{V}_b^H) && \text{(45b)}\\
&\leq \min\{\mathrm{rank}(\mathbf{V}_b\mathbf{A}_b\mathbf{V}_b^H),\ \mathrm{rank}(\mathbf{W})\} && \text{(45c)}
\end{aligned}$$

where (45a) is due to $\mathbf{I}_{N_t} + \sum_{k=1}^{K}\sum_{l=1}^{N_{e,k}} \mathbf{B}_{e,k}^{(l,l)} \succ \mathbf{0}$, (45b) and (45c) follow from (44) and a basic rank inequality property [41]. If we can prove that $\mathrm{rank}(\mathbf{V}_b\mathbf{A}_b\mathbf{V}_b^H) = 1$, then, from (45), we will obtain $\mathrm{rank}(\mathbf{W}) \leq 1$. Therefore, in the remaining part of the proof, we will focus on the rank of $\mathbf{V}_b\mathbf{A}_b\mathbf{V}_b^H$.

Substituting (39) into the KKT condition (42b), we obtain

$$\boldsymbol{\Gamma}_b(\lambda_b, \theta)\mathbf{A}_b + \mathbf{V}_b^H\mathbf{W}\mathbf{V}_b\mathbf{A}_b = \mathbf{0}. \tag{46}$$

And it follows by postmultiplying (46) by $\mathbf{V}_b^H$ that

$$\boldsymbol{\Gamma}_b(\lambda_b, \theta)\mathbf{A}_b\mathbf{V}_b^H + \mathbf{V}_b^H\mathbf{W}\mathbf{V}_b\mathbf{A}_b\mathbf{V}_b^H = \mathbf{0}. \tag{47}$$

By noting the following facts

$$\begin{aligned}
[\ \mathbf{I}_{N_t} \quad \mathbf{0}\ ]\boldsymbol{\Gamma}_b(\lambda_b, \theta) &= \lambda_b[\ \mathbf{I}_{N_t} \quad \mathbf{0}\ ] = \lambda_b(\mathbf{V}_b - [\ \mathbf{0}_{N_t} \quad \bar{\mathbf{h}}\ ]),\\
[\ \mathbf{I}_{N_t} \quad \mathbf{0}\ ]\mathbf{V}_b^H &= \mathbf{I}_{N_t},
\end{aligned} \tag{48}$$

we premultiply the both sides of (47) by $[\ \mathbf{I}_{N_t}\ \ \mathbf{0}\ ]$ to get

$$\lambda_b(\mathbf{V}_b - [\ \mathbf{0}_{N_t}\ \ \bar{\mathbf{h}}\ ])\mathbf{A}_b\mathbf{V}_b^H + \mathbf{W}\mathbf{V}_b\mathbf{A}_b\mathbf{V}_b^H = \mathbf{0}, \tag{49a}$$

$$\Leftrightarrow\ (\lambda_b\mathbf{I}_{N_t} + \mathbf{W})\mathbf{V}_b\mathbf{A}_b\mathbf{V}_b^H = \lambda_b[\ \mathbf{0}_{N_t}\ \ \bar{\mathbf{h}}\ ]\mathbf{A}_b\mathbf{V}_b^H. \tag{49b}$$

We claim that λ_b must be positive. Suppose that $\lambda_b = 0$. Then, according to (49a), we have $\mathbf{W}\mathbf{V}_b\mathbf{A}_b\mathbf{V}_b^H = \mathbf{0}$. By (44) and $\mathbf{I}_{N_t} + \sum_{k=1}^{K}\sum_{l=1}^{N_{e,k}}\mathbf{B}_{e,k}^{(l,l)} \succ \mathbf{0}$, we have $\mathbf{W} = \mathbf{0}$. However, $\mathbf{W} = \mathbf{0}$ is infeasible to the relaxed R-SRC problem (24), whenever $R > 0$. Therefore, $\lambda_b > 0$ must hold. With $\lambda_b > 0$, we have that

$$\mathrm{rank}(\mathbf{V}_b\mathbf{A}_b\mathbf{V}_b^H) = \mathrm{rank}\big((\lambda_b\mathbf{I}_{N_t} + \mathbf{W})\mathbf{V}_b\mathbf{A}_b\mathbf{V}_b^H\big) \tag{50a}$$

$$= \mathrm{rank}\big(\lambda_b[\ \mathbf{0}_{N_t}\ \ \bar{\mathbf{h}}\ ]\mathbf{A}_b\mathbf{V}_b^H\big) \tag{50b}$$

$$\leq \mathrm{rank}\big([\ \mathbf{0}_{N_t}\ \ \bar{\mathbf{h}}\ ]\big) \leq 1, \tag{50c}$$

where (50a) is due to $\lambda_b\mathbf{I}_{N_t} + \mathbf{W} \succ \mathbf{0}$, (50b) and (50b) follow from (49b) and a basic rank inequality property [41].

Combining (45) and (50), we have

$$\mathrm{rank}(\mathbf{W}) \leq \mathrm{rank}(\mathbf{V}_b\mathbf{A}_b\mathbf{V}_b^H) \leq 1.$$

Since $\mathbf{W} \neq \mathbf{0}$ for $R > 0$, the rank of $\mathbf{W}$ must be one.

Regarding the uniqueness of the optimal solution, the proof is exactly the same as that in Proposition 1. We therefore omit it for brevity.

D. Proof of Proposition 4

By the change of variable $\mathbf{W} = \mathbf{Z}/\xi$, $\xi > 0$, Problem (32) can be transformed to

$$\min_{\mathbf{Z},\xi}\ \frac{\xi + \max\limits_{k=1,\ldots,K}\ \max\limits_{\mathbf{G}_k\in\mathcal{B}_{e,k}}\ \mathrm{Tr}(\mathbf{G}_k^H\mathbf{Z}\mathbf{G}_k)}{\xi + \min\limits_{\mathbf{h}\in\mathcal{B}_b}\mathbf{h}^H\mathbf{Z}\mathbf{h}} \tag{51a}$$

$$\text{s.t. } \mathrm{Tr}(\mathbf{Z}) \leq \xi P, \tag{51b}$$

$$\mathbf{Z} \succeq \mathbf{0},\ \xi > 0. \tag{51c}$$

We first show that (51) is equivalent to the following problem

$$\min_{\mathbf{Z},\xi}\ \xi + \max_{k=1,\ldots,K}\ \max_{\mathbf{G}_k\in\mathcal{B}_{e,k}}\ \mathrm{Tr}(\mathbf{G}_k^H\mathbf{Z}\mathbf{G}_k) \tag{52a}$$

$$\text{s.t. } \xi + \min_{\mathbf{h}\in\mathcal{B}_b}\ \mathbf{h}^H\mathbf{Z}\mathbf{h} \geq 1, \tag{52b}$$

$$\mathrm{Tr}(\mathbf{Z}) \leq \xi P, \tag{52c}$$

$$\mathbf{Z}\succeq\mathbf{0},\ \ \xi\geq 0. \tag{52d}$$

Consider the optimal solution of (52), say, denoted by $(\mathbf{Z}^\star,\xi^\star)$. From (52b) and (52c), it can be verified that $\xi^\star>0$ must hold. Hence, $(\mathbf{Z}^\star,\xi^\star)$ is feasible to (51). One can deduce that $(\mathbf{Z}^\star,\xi^\star)$ is optimal to (51) if it holds true that

$$\xi^\star + \min_{\mathbf{h}\in\mathcal{B}_b}\ \mathbf{h}^H\mathbf{Z}^\star\mathbf{h} = 1.$$

We use contradiction to verify the latter. Suppose that $\xi^\star+\min_{\mathbf{h}\in\mathcal{B}_b}\mathbf{h}^H\mathbf{Z}^\star\mathbf{h}>1$. Then we can choose a feasible point $(\tilde{\mathbf{Z}},\tilde{\xi})=(\alpha\mathbf{Z}^\star,\alpha\xi^\star)$ for some $0<\alpha<1$ such that $\tilde{\xi}+\min_{\mathbf{h}\in\mathcal{B}_b}\mathbf{h}^H\tilde{\mathbf{Z}}\mathbf{h}=1$. The point $(\tilde{\mathbf{Z}},\tilde{\xi})$ can be verified to achieve an objective value lower than that offered by the optimal point $(\mathbf{Z}^\star,\xi^\star)$, which is a contradiction.

Our next step is to turn (52) to an SDP. Using the epigraph reformulation, (52) can be rewritten as

$$\min_{\mathbf{Z},\xi,\tau}\ \tau \tag{53a}$$

$$\text{s.t. } \tau \geq \xi + \max_{\mathbf{G}_k\in\mathcal{B}_{e,k}}\ \mathrm{Tr}(\mathbf{G}_k^H\mathbf{Z}\mathbf{G}_k),\ \ k=1,\ldots,K, \tag{53b}$$

$$\xi + \min_{\mathbf{h}\in\mathcal{B}_b}\ \mathbf{h}^H\mathbf{Z}\mathbf{h} \geq 1, \tag{53c}$$

$$\mathrm{Tr}(\mathbf{Z}) \leq \xi P, \tag{53d}$$

$$\mathbf{Z}\succeq\mathbf{0},\ \ \xi\geq 0. \tag{53e}$$

By applying the $\mathcal{S}$-procedure to convert the constraints (53b) and (53c) into LMIs, we obtain the SDP (34).

E. Worst-case Secrecy Rate Calculation

The worst-case secrecy rate function $\psi(\mathbf{W})$ in (18)-(21) can be computed when $\mathbf{W}$ is of rank one (which is the case of all the considered methods in this paper). With rank-one $\mathbf{W}$, $\psi(\mathbf{W})$ can be reduced to

$$\psi(\mathbf{W}) = \min_{\mathbf{h}\in\mathcal{B}_b}\log(1+\mathbf{h}^H\mathbf{W}\mathbf{h}) - \max_{k=1,\ldots,K}\ \max_{\mathbf{G}_k\in\mathcal{B}_{e,k}}\ \log(1+\mathrm{Tr}(\mathbf{G}_k^H\mathbf{W}\mathbf{G}_k)). \tag{54}$$

The first and second terms of (54) are separate optimization problems. They can be recast as the following two SDPs by using the $\mathcal{S}$-procedure:

$$\begin{aligned}\tau_1^\star = \max_{\tau_1,\lambda_b}\ & \tau_1 \\ \text{s.t.}\ & \begin{bmatrix}\lambda_b \mathbf{I}_{N_t} + \mathbf{W} & \mathbf{W}\bar{\mathbf{h}} \\ \bar{\mathbf{h}}^H\mathbf{W} & \bar{\mathbf{h}}^H\mathbf{W}\bar{\mathbf{h}} + 1 - \tau_1 - \lambda_b\varepsilon_b^2\end{bmatrix} \succeq \mathbf{0}, \\ & \lambda_b \geq 0,\end{aligned}$$

and

$$\begin{aligned}\tau_2^\star = \min_{\tau_2,\lambda_{e,1},\ldots,\lambda_{e,K}}\ & \tau_2 \\ \text{s.t.}\ & \begin{bmatrix}\lambda_{e,k}\mathbf{I}_{N_{e,k}N_t} - \boldsymbol{\mathcal{W}}_k & -\boldsymbol{\mathcal{W}}_k\bar{\boldsymbol{g}}_k \\ -\bar{\boldsymbol{g}}_k^H\boldsymbol{\mathcal{W}}_k & -\lambda_{e,k}\varepsilon_{e,k}^2 - \bar{\boldsymbol{g}}_k^H\boldsymbol{\mathcal{W}}_k\bar{\boldsymbol{g}}_k + \tau_2 - 1\end{bmatrix} \succeq \mathbf{0}, \\ & \lambda_{e,k} \geq 0,\ k = 1,\ldots,K,\end{aligned}$$

where $\boldsymbol{\mathcal{W}}_k = \mathbf{I}_{N_{e,k}} \otimes \mathbf{W}$. Once the optimal values $\tau_1^\star$ and $\tau_2^\star$ are computed (by an available SDP solver), the worst-case secrecy rate is obtained as

$$\psi(\mathbf{W}) = \log(\tau_1^\star) - \log(\tau_2^\star).$$

REFERENCES

[1] A. D. Wyner, "The wiretap channel," in *The Bell System Technical Journal*, vol. 54, October 1975, pp. 1355–1387.

[2] S. K. Leung-Yan-Cheong and M. E. Hellman, "The Gaussian wiretap channel," *IEEE Trans. Info. Theory*, vol. 24, no. 4, pp. 451–456, July 1978.

[3] I. Csiszár and J. Körner, "Broadcast channels with confidential messages," *IEEE Trans. Info. Theory*, vol. 24, no. 3, pp. 339–348, May 1978.

[4] A. Khisti and G. W. Wornell, "Secure transmission with multiple antennas I: The MISOME wiretap channel," *IEEE Trans. Inf. Theory*, vol. 56, no. 7, pp. 3088–3104, July 2010.

[5] A. Khisti and G. Wornell, "Secure transmission with multiple antennas — Part II: The MIMOME wiretap channel," *IEEE Trans. Inf. Theory*, vol. 56, no. 11, pp. 5515–5532, Nov. 2010.

[6] F. Oggier and B. Hassibi, "The secrecy capacity of the MIMO wiretap channel," in *IEEE Int'l Symp. on Info. Theory*, July 2008, pp. 524–528.

[7] R. Bustin, R. Liu, H. V. Poor, and S. Shamai (Shitz), "An MMSE approach to the secrecy capacity of the MIMO Gaussian wiretap channel," in *IEEE Int'l Symp. on Info. Theory*, June-July 2009, pp. 2602–2606.

[8] T. Liu and S. Shamai (Shitz), "A note on the secrecy capacity of the multiple-antenna wiretap channel," *IEEE Trans. Inf. Theory*, vol. 55, no. 6, pp. 2547–2553, Jun. 2009.

[9] Y. Liang, H. V. Poor, and S. Shamai (Shitz), "Secure communication over fading channels," *IEEE Trans. Inf. Theory*, vol. 54, no. 6, pp. 2470–2492, Jun. 2008.

[10] Y. Liang, G. Kramer, H. V. Poor, and S. Shamai (Shitz), "Compound wire-tap channels," in *Proc. 45th Annual Allerton Conf. Commun., Control, and Computing*, Sept. 2007, pp. 136–143.

[11] S. Shafiee and S. Ulukus, "Achievable rates in Gaussian MISO channels with secrecy constraints," in *IEEE Int'l Symp. on Info. Theory*, June 2007, pp. 2466–2470.

[12] A. Mukherjee and A. L. Swindlehurst, "Utility of beamforming strategies for secrecy in multiuser MIMO wiretap channels," in *In Proc. 47th Allerton Conf. on Communications, Control and Computing, Monticello, IL*, Oct. 2009.

[13] L. Dong, Z. Han, A. P. Petropulu, and H. V. Poor, "Improving wireless physical layer security via cooperating relays," *IEEE Trans. Signal Process.*, vol. 58, no. 3, pp. 1875–1888, Mar. 2010.

[14] R. Negi and S. Goel, "Secret communication using artificial noise," in *IEEE VTC*, Sept. 2005, pp. 1906–1910.

[15] A. L. Swindlehurst, "Fixed SINR solution for the MIMO wiretap channel," in *Proc. ICASSP'09*, April 2009, pp. 2437–2440.

[16] L. Zhang, R. Zhang, Y.-C. Liang, Y. Xin, and S. Cui, "On the relationship between the multi-antenna secrecy communications and cognitive radio communications," *IEEE Trans. Commun.*, vol. 58, no. 6, pp. 1877–1886, Jun. 2010.

[17] A. Mukherjee and A. L. Swindlehurst, "Fixed-rate power allocation strategies for enhanced secrecy in MIMO wiretap channels," in *10th IEEE Workshop on Sig. Proc. Adv. in Wireless Commun.*, June 2009, pp. 344–348.

[18] S. Gerbracht, A. Wolf, and E. A. Jorswieck, "Beamforming for fading wiretap channels with partial channel information," in *International ITG Workshop on Smart Antennas (WSA), Bremen, Germany*, Feb. 2010.

[19] J. Liu, Y. Hou, and H. D. Sherali, "Optimal power allocation for achieving perfect secrecy capacity in MIMO wire-tap channels," in *Conf. on Info. Sci. and Sys.*, Mar. 2009, pp. 606–611.

[20] Z. Li, W. Trappe, and R. Yates, "Secret communication via multi-antenna transmission," in *41st Conf. on Info. Sci. and Sys.*, Mar. 2007, pp. 905–910.

[21] J. Li and A. P. Petropulu, "Transmitter optimization for achieving secrecy capacity in Gaussian MIMO wiretap channels," available online at `http://arxiv.org/abs/0909.2622`.

[22] L. Zhang, Y.-C. Liang, Y. Pei, and R. Zhang, "Robust beamforming design: from cognitive radio MISO channels to secrecy MISO channels," in *GLOBECOM*, Dec. 2009, pp. 1–5.

[23] W.-C. Liao, T.-H. Chang, W.-K. Ma, and C.-Y. Chi, "QoS-based transmit beamforming in the presence of eavesdroppers: An artificial-noise-aided approach," *to appear in IEEE Trans. Signal Process.*, 2011.

[24] R. D. Pietro, L. V. Mancini, and S. Jajodia, "Efficient and secure keys management for wireless mobile communications," in *Proceedings of the 2nd ACM International Workshop on Principles of Mobile Computing*, 2002, pp. 66–73.

[25] H. Chan, A. Perrig, and D. Song, "Random key predistribution schemes for sensor networks," in *Proceedings of the IEEE Symposium Security and Privacy*, 2003, pp. 197–213.

[26] A. Khisti, G. Wornell, A. Wiesel, and Y. Eldar, "On the Gaussian MIMO wiretap channel," in *IEEE Int'l Symp. on Info. Theory*, June 2007, pp. 2471–2475.

[27] M. Grant and S. Boyd, "CVX: Matlab software for disciplined convex programming (web page and software) http://stanford.edu/∼ boyd/cvx," Jun. 2009.

[28] J. Sturm, "Using SeDuMi 1.02, a MATLAB toolbox for optimization over symmetric cones," *Optim. Methods Softw.*, vol. 11, pp. 625–653, 1999, (webpage and software) http://sedumi.ie.lehigh.edu/.

[29] A. Wiesel, Y. Eldar, and S. Shamai (Shitz), "Linear precoding via conic optimization for fixed MIMO receivers," *IEEE Transactions on Signal Processing*, vol. 54, no. 1, pp. 161–176, Jan. 2006.

[30] M. Schubert and H. Boche, "Solution of the multiuser downlink beamforming problem with individual SINR constraints," *IEEE Transactions on Vehicular Technology*, vol. 53, no. 1, pp. 18–28, Jan. 2004.

[31] E. A. Jorswieck and S. Gerbracht, "Secrecy rate region of downlink OFDM systems: Efficient resource allocation," in *International OFDM-Workshop (InOWo'09)*, Sept. 2009.

[32] G. Wunder and T. Michel, "Multiuser OFDMA optimization: Algorithms and duality gap analysis," in *International ITG Workshop on Smart Antennas (WSA), Darmstadt*, Feb. 2008.

[33] A. Mukherjee and A. L. Swindlehurst, "Robust beamforming for secrecy in MIMO wiretap channels with imperfect CSI," accepted in *IEEE Trans. Signal Process.*, 2010, available online at `http://arxiv.org/abs/1009.2274`.

[34] Y. Liang, H. V. Poor, and S. Shamai (Shitz), *Information Theoretic Security*. Hanover, MA, USA: Now Publishers, 2008.

[35] S. Boyd and L. Vandenberghe, *Convex Optimization*. Cambridge, UK: Cambridge University Press, 2004.

[36] A. Charnes and W. W. Cooper, "Programming with linear fractional functionals," *Naval Research Logistics Quarterly*, vol. 9, pp. 181–186, 1962.

[37] T.-H. Chang, C.-W. Hsin, W.-K. Ma, and C.-Y. Chi, "A linear fractional semidefinite relaxation approach to maximum-likelihood detection of higher-order QAM OSTBC in unknown channels," *IEEE Trans. Signal Process.*, vol. 58, no. 4, pp. 2315–2326, Apr. 2010.

[38] M. B. Shenouda and T. N. Davidson, "Convex conic formulations of robust downlink precoder designs with quality of service constraints," *IEEE J. Select. Topics in Signal Processing*, vol. 1, no. 4, pp. 714–724, Dec. 2007.

[39] N. Vucic and H. Boche, "Robust QoS-constraint optimization of downlink multiuser MISO systems," *IEEE Trans. Signal Process.*, vol. 57, no. 2, pp. 714–725, Feb. 2009.

[40] J. Wang and D. P. Palomar, "Worst-case robust MIMO transmission with imperfect channel knowledge," *IEEE Trans. Signal Process.*, vol. 57, no. 8, pp. 3086–3100, Aug. 2009.

[41] R. A. Horn and C. R. Johnson, *Matrix analysis*. New York: Cambridge University Press, 1985.