arXiv:2210.14163v1 [cs.CV] 19 Oct 2022

Multi-Granularity Cross-Modality Representation Learning for Named Entity Recognition on Social Media

Peipei Liu
liupeipei@iie.ac.cn
School of Cyber Security, University of Chinese Academy of Sciences, Institute of Information Engineering, Chinese Academy of Sciences
Haidian, Beijing, China

Gaosheng Wang
wanggaosheng@iie.ac.cn
School of Cyber Security, University of Chinese Academy of Sciences, Institute of Information Engineering, Chinese Academy of Sciences
Haidian, Beijing, China

Hong Li
lihong@iie.ac.cn
School of Cyber Security, University of Chinese Academy of Sciences, Institute of Information Engineering, Chinese Academy of Sciences
Haidian, Beijing, China

Jie Liu
liujie1@iie.ac.cn
School of Cyber Security, University of Chinese Academy of Sciences, Institute of Information Engineering, Chinese Academy of Sciences
Haidian, Beijing, China

Yimo Ren
renyimo@iie.ac.cn
School of Cyber Security, University of Chinese Academy of Sciences, Institute of Information Engineering, Chinese Academy of Sciences
Haidian, Beijing, China

Hongsong Zhu
zhuhongsong@iie.ac.cn
School of Cyber Security, University of Chinese Academy of Sciences, Institute of Information Engineering, Chinese Academy of Sciences
Haidian, Beijing, China

Limin Sun
sunlimin@iie.ac.cn
School of Cyber Security, University of Chinese Academy of Sciences, Institute of Information Engineering, Chinese Academy of Sciences
Haidian, Beijing, China

ABSTRACT

Named Entity Recognition (NER) on social media refers to discovering and classifying entities from unstructured free-form content, and it plays an important role for various applications such as intention understanding and user recommendation. With social media posts tending to be multimodal, Multimodal Named Entity Recognition (MNER) for the text with its accompanying image is attracting more and more attention since some textual components can only be understood in combination with visual information. However, there are two drawbacks in existing approaches: 1) Meanings of the text and its accompanying image do not match always, so the text information still plays a major role. However, social media posts are usually shorter and more informal compared with other normal contents, which easily causes incomplete semantic description and the data sparsity problem. 2) Although the visual representations of whole images or objects are already used, existing methods ignore either fine-grained semantic correspondence between objects in images and words in text or the objective fact that there are misleading objects or no objects in some images. In this work, we solve the above two problems by introducing the multi-granularity cross-modality representation learning. To resolve the first problem, we enhance the representation by semantic augmentation for each word in text. As for the second issue, we perform the cross-modality semantic interaction between text and vision at the different vision granularity to get the most effective multimodal guidance representation for every word. Experiments show that our proposed approach can achieve the SOTA or approximate SOTA performance on two benchmark datasets of tweets. The code, data and the best performing models are available at https://github.com/LiuPeiP-CS/IIE4MNER

CCS CONCEPTS

• **Computing methodologies** → **Neural networks**; **Information extraction**; • **Information systems** → **Web searching and information discovery**.

KEYWORDS

Multimodality, Multi-Granularity, Named Entity Recognition, Social Media, Transformer

Rocky[MISC] is ready for snow season.

A

#DRC[LOC] plans to lease out 1/4 of country to agribusiness investors.

B

Figure 1: The samples for MNER task.

1 INTRODUCTION

Named Entity Recognition (NER) aims to discover entities from unstructured free-form text and classify them into pre-defined categories such as Person(*PER*), Organization(*ORG*), Location(*LOC*), etc [36]. Social media platforms like Twitter and Facebook have become a part of daily life for many people, and tweets on them reflect the opinions, demands and sentiments of users. Mining specific information from tweets can help understand user intents, realize personalized assistance and various downstream applications. As one important means of information extraction, NER plays a crucial role in mining tweet contents.

Currently, prevailing text-based NER methods have achieved decent performance for well-formed text, where they apply CNN, LSTM and Transformer as the encoder to learn contextual representation for input words and softmax, CRF and word-word association designs are used for decoding [6, 11, 16, 21, 27, 39]. Unfortunately, they often have difficulty meeting the expectations of mining sufficient information from tweets since lots of tweets include not only textual content but also images, and some textual content can only be understood in combination with the visual context [20, 36]. For example in Figure 1(A), given only the text "Rocky is ready for snow season.", we can hardly infer the type of named entity "Rocky" because it may be an animal(*MISC* type) or a person(*PER* type).

To address the challenge above, Multimodal Named Entity Recognition (MNER) has been proposed. The task of MNER is to identify the entity and classify it with the help of an associated image. Existing MNER methods can be divided into two categories: some works [3, 4, 20, 23, 35–37] take the text and whole image together as input to encode hidden representation for each word, and the other researches [34] build the alignment between hidden textual vectors and visual object features to get richer representation of each word. All of these methods show that MNER can achieve better results than NER by enhancing linguistic representations with the aid of visual information.

Although existing methods have shown success of MNER, there are two remaining challenges. On one hand, meanings of the text and its accompanying image are deeply hidden or not always matched explicitly, so the textual content still plays a major role in MNER. However, the text of tweets often comes in informal language including inconsistent or incomplete syntax, slang, OOV, etc, and it can lead to the data sparsity. As shown in Figure 1(B), how can we understand the entity "#DRC"? Is it a council (*ORG* type), a president (*PER* type), or a nation (*LOC* type)? On the other hand, despite the fact that visual representations are explored in previous works, the representations of whole images ignore fine-grained semantic correspondence between the objects in images and the words in text (as shown in Figure 1(A), the objects can contribute pointing information to detect the entities), while the only use of object-level feature overlooks the fact that there may be misleading objects or no objects in some images such as architectural and scenery images.

To solve these problems, we propose the multi-granularity cross-modality representation learning for MNER in tweets. The model firstly performs unimodal representation learning to obtain and represent the initial tokens of each modality (i.e., text and vision) and learn the implicit inner-connections among these tokens. To alleviate the incomplete semantic description and data sparsity problems of tweet contents, a semantic augmentation method is designed to add the external support for each input word. Secondly, we construct a Multi-Granularity Cross-Modality Transformer (MGCMT) to get the cross-modality semantic interaction between text and vision at the different vision granularity. Specifically, we build the TextImg module to get coarse-grained cross-modality interaction between text and global image, and the TextObj module to get fine-grained cross-modality interaction between text and local objects. In both modules, Transformer layers are stacked to learn multi-level word-aware representation and a gate function is employed to control the contribution from different levels. After concatenating results from the two modules, we thus can have the coarse-to-fine multimodal inference information. The model lastly combines the textual and multimodal information, and feeds the combination to a CRF layer to get label sequence prediction. Additionally, another CRF layer is used to perform the entity span detection which has been proved effective for helping word classification. We have conducted experiments on the two public twitter datasets, and the results demonstrate the advance of our proposed method.

The main contributions of this paper can be summarized as:

- We propose a new model to improve the performance of MNER on social media. The model enhances the representation of each input word by performing semantic augmentation and Multi-Granularity Cross-Modality Transformer.
- We extend the vanilla Transformer to adopt a cross-modality attention mechanism within each level at multi-level, and a gate module is arranged to control the contribution from different levels. Besides, the concatenation is applied for combining the multimodal guidance representations from text-image and text-objects.
- Through comprehensive experiments and analyses, we demonstrate the competitive performance of our method in comparison with the current state-of-the-art models.

2 RELATED WORK

General NER: Traditional supervised learning researches of NER mainly focus on designing various features (such as word-level features [17, 26], list lookup features [31]and document and corpus features [10]) to represent input text and applying different linear classifiers including SVM, HMM and CRF for word classification [25, 38]. With the development of deep learning(DL), more and more DL-based methods continuously achieve state-of-the-art performance on formal text [5, 22]. [9] first proposes a BiLSTM-CRF architecture. Following [9], a body of works employ a recurrent neural network(RNN) with a CRF or softmax for sequence labeling accompanied with feature extractors for words (e.g. CBOW, GloVe, Bert) and characters (CNN-based [22], RNN-based [13, 32]). However, these approaches usually fail to achieve satisfactory results on social media posts due to the informal characteristic of posts. Several later works have tried to address this issue by exploiting external resources (e.g., shallow parser, Freebase dictionary, and orthographic characteristics) to incorporate a set of tweet-specific features into input, and they can obtain better performance for NER on social media text [1, 18].

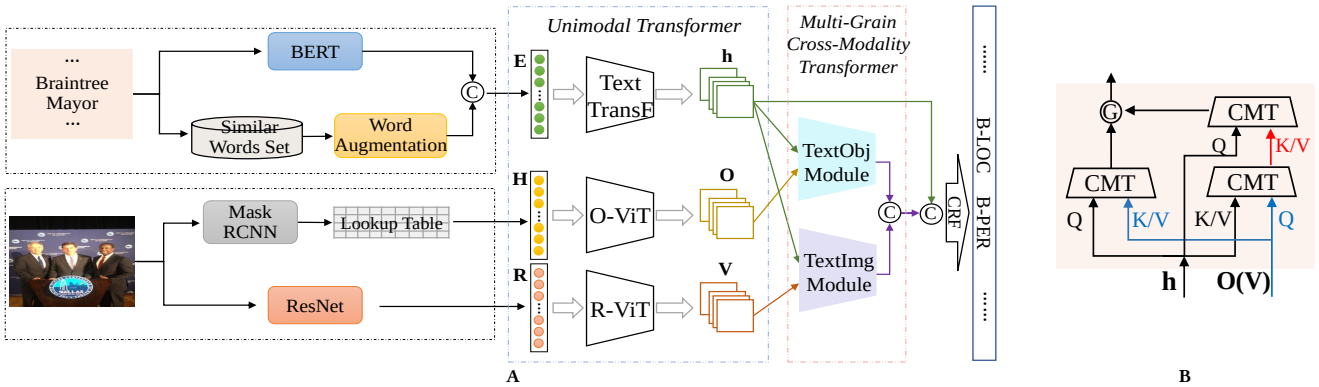

Figure 2: (A) Architecture of our proposed approach. (B) Details of the TextObj and TextImg. The inputs are h and O for the TextObj while h and V for the TextImg.

Methods for MNER: As social medial posts become more multimodal, MNER is attracting researchers' attention. Recent researches have shown that image information is helpful to understand textual content. [23] is the first work to introduce MNER task, and it proposes a LSTM-CNN hybrid multimodal network with modality-attention module to selectively merge textual and whole image information. To control the contribution of visual information, [37] introduces an adaptive co-attention network to dynamically combine the textual and visual representation while [20] designs a visual attention model to extract image features from the regions related to the text and uses a gate to combine textual features and image features. Following [20], [36] proposes a multimodal Transformer architecture to capture inter-modality dynamics between words and image regions, and leverages purely text-based entity span detection as an auxiliary module to further improve performance. Besides, [4] extra employs both image attributes and image knowledge to improve named entity extraction. Recently, [35] proposes a general matching and alignment framework for MNER task, which can reduce the impact of mismatched text-image pairs and make the representations between the two modalities more consistent. Different from the above use of whole image, [34] introduces object-level visual representations, for focusing the attention on entity-relevant objects to help extract the entities precisely. In addition to improvements of MNER methods, [28, 29] consider inferring the text-image relationship to address the problem of inappropriate visual clues and introduce pre-trained multimodal models based on text-image relationship inference.

In this paper, we propose the multi-granularity cross-modality representation learning which can model the inter-modal interactions between text and vision at both the global image level and local object level. We finally fuse the coarse-grained and fine-grained multimodal features to achieve the new state-of-the-art result.

3 THE PROPOSED APPROACH

In this section, we first define the MNER task and give an overview of our proposed approach. Then, we take the sequence and image shown in Figure 2(A) as a running example to detail the components of our approach.

Task Definition: Given a sentence **X** and its associated image **I** as input, the goal of MNER is to extract a set of entities from **X**, and classify each extracted entity into one of the pre-defined types [36]. As with other works in the literature [3, 4, 20, 23, 35–37], we regard the task as a sequence labeling problem. Let $\mathbf{X} = \{x_0, ..., x_M\}$ denote a sequence of input words with length M+1 and $\mathbf{Y} = \{y_0, ..., y_M\}$ indicate a corresponding label sequence, where $y_i \in \zeta$ and ζ is the pre-defined label set in standard BIO2 formats [30].

3.1 Overview

The overall architecture of our model is shown in Figure 2(A). For clarity, the model is described in three main components: (1) unimodal representation learning, (2) multi-granularity cross-modality Transformer , (3) MNER decoding module.

In the unimodal representation learning stage, we first obtain unimodal input representations for text and vision, respectively. The input representation of each textual word combines its contextualized word representation and semantic augmentation representation, while the visual inputs include the representation of global image and the representation of local objects. Next, we deploy three separate unimodal Transformer with self-attention to derive each token's contextual hidden representation for each mode (i.e., text, image, object).

As a multimodal extension of Transformer [33, 36], the multi-granularity cross-modality Transformer mainly consists of two modules: the bottom captures cross-modality semantic interaction between textual hidden representation and global visual hidden representation while the upper performs inter-modality semantic interaction between the textual and the local visual objects. In each module (details at Figure 2(B)), a gate is extra employed to control and weigh the contribution of interactive results at different levels. At last, word-aware multimodal representations from the two modules are concatenated as the output.

Finally, a decoding module with CRF decoder produces an entity label for each word in the text sequence based on both word-aware multimodal representation and textual context representation of the word. Furthermore, to improve the performance of our approach, we follow [36] to add a purely text-based entity span detection module in our model, where we feed the hidden representations from textual Transformer to another CRF layer to predict each word's entity span label.

3.2 Unimodal Representation Learning

3.2.1 Representations for input text. There are two kinds of representations for text input: contextualized word representation and semantic augmentation representation. Before inputting the two representations of each word into the textual Transformer encoder (Text TransF), we combine them via naive concatenation and linear transformation.

Contextualized word representation: BERT [6] benefits from a large external corpus and has strong dynamic feature extraction capability for the same word in different contexts. In this work, each text sequence $\mathbf{X} = \{x_0, ..., x_M\}$ is fed into the pre-trained 12-layers BERT to get the sequence representations $\mathbf{E}^B = \{E_0^B, ..., E_M^B\}$, where $E_i^B \in \mathbb{R}^d$ is the extracted word representation for x_i.

$$E_i^B = BERT(x_i; \theta^{bert}) \in \mathbb{R}^d \tag{1}$$

where θ^{bert} is the BERT parameter. Particularly, if x_i is split into several sub-tokens through the tokenizer, we get E_i^B by summing the sub-tokens.

Semantic augmentation representation: Semantic augmentation (especially from lexical semantics) has been demonstrated its effectiveness for model performance improvement in many NLP tasks [2, 12, 24]. In order to alleviate the incomplete semantic description and data sparsity problem caused by short and informal social media contents, we introduce semantic augmentation to enhance the representation of each word in the input text sequence.

Specifically, we obtain the semantic augmentation representation of each input word x_i by its most similar K words $\{w_{i1}, ...w_{iK}\}$ in the embedding space. Since not all the K words make equal contributions to assisting label prediction of x_i, it is important to get the most effective information from different words. Thus, an attentive module is leveraged to weigh the effect of different words. For the similar word w_{ij}, it is first assigned a weight as:

$$\alpha_{ij} = \frac{exp(cosine(v_i, v_{ij}))}{\sum_{k=1}^{K} exp(cosine(v_i, v_{ik}))} \tag{2}$$

where v_i and v_{ij} are the respective embedding of x_i and w_{ij} from a pre-trained Word2Vec model on 30 million tweets by [37]. Then the semantic augmentation representation E_i^A of x_i can be computed by:

$$E_i^A = \sum_{j=1}^{K} \alpha_{ij} v_{ij} \tag{3}$$

We can get the final representation $\mathbf{E}$ before textual Transformer by:

$$\mathbf{E} = \{Linear([E_i^B, E_i^A]) | i = 0, ..., M\} = \{E_i | E_i \in \mathbb{R}^d, i = 0, ..., M\} \tag{4}$$

where $Linear(\cdot)$ is the linear transformation for dimension alignment and $[\cdot, \cdot]$ indicates the concatenation operation (the same as below).

3.2.2 Representation for the global image: We use convolutional neural networks (CNN) [15] to obtain visual representation of the global image $\mathbf{I}$. Considering that Residual Network (ResNet) [8] is one of the state-of-the-art CNN models for multiple vision tasks and it can extract meaningful feature representation of the input image in its deep layers, we thus take the feature map from the last convolutional layer in a pre-trained 152-layers ResNet to represent $\mathbf{I}$.

Concretely, we first resize $\mathbf{I}$ into 224×224 pixels, and then pass it to ResNet and retain the visual feature map with a dimension of $7 \times 7 \times 2048$. The number 2048 is the dimension of the feature vector for each visual block, and 7×7 is the number of visual blocks. We further transform the feature vector of each block into the same dimension space as word representations using a single linear layer for the subsequent processes. Therefore, the global visual representation of $\mathbf{I}$ can be denoted by:

$$\mathbf{R}' = ResNet(\mathbf{I}; \theta^{res}) \tag{5}$$

$$\mathbf{R} = Linear(\mathbf{R}') = \{R_i | R_i \in \mathbb{R}^d, i = 1, 2, ..., 49\} \tag{6}$$

where θ^{res} is the ResNet parameter and R_i is a d dimensional feature vector for *i-th* visual block .

3.2.3 Representations for the local objects: As one of the most excellent object detection models, Mask RCNN [7] is widely used in many tasks such as object classification, instance segmentation, etc. To extract visual features of the local objects, we first apply Mask RCNN pre-trained on the MS COCO [19] dataset to detect a set of objects from the image $\mathbf{I}$ and classify them into predefined categories[1]. The feature representations of detected objects are then obtained by looking up the category embedding table. In practice, we can get representations for the local objects as follows[2]:

$$H_i = H_i' W_o, W_o \in \mathbb{R}^{81 \times d} \tag{7}$$

$$\mathbf{H} = \{H_i | H_i \in \mathbb{R}^d, i = 1, 2, ..., N\} \tag{8}$$

where 81 is the size of predefined categories, W_o is the randomly initialized category embedding table, H_i' is an 81-dimension one-hot vector denoting the category of object i, N indicates top-N detected objects with higher classification scores.

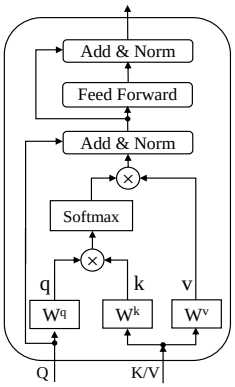

Figure 3: Details of the Transformer. The Q and K/V are from different modality for Transformer with cross-attention while the Q and K/V are from the same modality for Transformer with self-attention.

[1]We keep the original category set of the MS COCO with size 81 to avoid object omission.

[2]If there are no objects detected, we set $\mathbf{H}$ to be zero vectors.

3.2.4 Unimodal Transformer with self-attention: Although the primary representation of each unimodal token[3] is extracted, we observe that the interrelated information among all unimodal tokens is ignored. For example, we can admit the inner-connection "Horse is On the Road" but not "Road is On the Horse" between visual objects "Road" and "Horse". In this section, we leverage the Transformer as an encoder to gain the mutual information for each unimodal token. As Figure 3 shows, the unimodal Transformer is composed of two sub-layers where the first is a multi-head attention mechanism and the second is a feed-forward network(FFN). Moreover, the residual connection with layer normalization is applied before FFN and after FFN.

For the modality representation π(π is one of $\mathbf{E}$, $\mathbf{R}$ or $\mathbf{H}$), we first have $\pi = Q = K = V$ as the input of unimodal Transformer. Then, we can obtain the queries, key-value pairs by linear projections, and perform multi-head attention (MA) between queries and key-value pairs. Mathematically, the MA can be expressed as:

$$q_i = QW_i^q,\ k_i = KW_i^k,\ v_i = VW_i^v \tag{9}$$

$$z = MA(Q, K, V) = concat\{softmax(q_i k_i^\top / \sqrt{\frac{d}{m}})v_i\}_{i=1}^m \tag{10}$$

where W_i^q,W_i^k,$W_i^v \in \mathbb{R}^{d\times(d/m)}$ are trainable parameters for the i-th head, d and m are the representation dimension and number of attention heads, $concat\{\cdot\}$ denotes the concatenation operation. Thus, the output χ of the unimodal Transformer for a given modality representation $\pi = Q$ is defined as follows:

$$\chi' = LN(Q + z) \tag{11}$$

$$\chi = LN(\chi' + FFN(\chi')) \tag{12}$$

In fact, χ is the output $\mathbf{h} = \{h_i | h_i \in \mathbb{R}^d, i = 0, ..., M\}$ of textual Transformer when π is $\mathbf{E}$, the output $\mathbf{V} = \{V_i | V_i \in \mathbb{R}^d, i = 1, ..., 49\}$ of image-level visual Transformer (R-ViT) when π is $\mathbf{R}$ and the output $\mathbf{O} = \{O_i | O_i \in \mathbb{R}^d, i = 1, ..., N\}$ of object-level visual Transformer (O-ViT) when π is $\mathbf{H}$. Additionally, owing to that all of queries, keys and values in attention mechanism originate from the same modality representation, we view the multi-head attention as multi-head self-attention (MSA) in such Transformers.

3.3 Multi-Granularity Cross-Modality Transformer

The global visual representation is a reasonable expression, but not the best because it can't support the fine-grained semantic correspondences between semantic units within an input text-image pair. Different from the global image, local objects can provide the clues for fine-grained semantic interaction across text and vision to help us identify some words as the correct entity types. Therefore, we design the MGCMT which performs cross-modality semantic interaction between text and vision at different vision granularity to get the most effective guidance information for assisting textual word classification. Given the textual hidden representation $\mathbf{h}$, the visual hidden representation $\mathbf{V}$ of global image and the visual hidden representation $\mathbf{O}$ of local objects, this section will illustrate the details about MGCMT in the following two modules: cross-modality interaction between text and global image(TextImg), and cross-modality interaction between text and local objects(TextObj).

3.3.1 Cross-Modality Interaction between Text and Global Image. As Figure 3 shows, the basic framework of a cross-modality Transformer(CMT) layer is the same as the unimodal Transformer at *Section*.3.2.4 except that the Q, K-V are from different sources. In order to learn more relevant word-aware representation features based on the global image, we stack the cross-modality Transformer layers to build multi-level semantic interaction.

For the basic-level semantic interaction (the left part of TextImg in Figure 2(B)), we have $\mathbf{h} = Q$ and $\mathbf{V} = K = V$. Then the word-aware image representation $\mathbf{S}^{v,1}$ for the input text sequence can be computed through *Equation*.9–*Equation*.12, where $\mathbf{S}^{v,1} \in \mathbb{R}^{(M+1)\times d}$.

For the superior-level semantic interaction (the right part of TextImg in Figure 2(B)), we initially assign $\mathbf{V}$ to Q, $\mathbf{h}$ to K and V to compute the image-aware word representation $\mathbf{S}^{v,2'}$ via *Equation*.9–*Equation*.12 at the first stage, where $\mathbf{S}^{v,2'} \in \mathbb{R}^{49\times d}$. At the second stage, we make $\mathbf{h}$ as Q, $\mathbf{S}^{v,2'}$ as K and V to distill the cross-modality representation $\mathbf{S}^{v,2}$ for the input text sequence, where $\mathbf{S}^{v,2} \in \mathbb{R}^{(M+1)\times d}$.

We later employ a gate function to trade off the cross-modality contributions of both levels for the input text sequence:

$$\mu = \sigma(\mathbf{S}^{v,1} \cdot W^{v,1} + \mathbf{S}^{v,2} \cdot W^{v,2} + b^v) \tag{13}$$

$$\mathbf{S}^v = \mu \odot \mathbf{S}^{v,1} + (\mathbf{1} - \mu) \odot \mathbf{S}^{v,2} \tag{14}$$

where $W^{v,1}$, $W^{v,2} \in \mathbb{R}^{d\times d}$ are trainable matrices and $b^v \in \mathbb{R}^d$ is the corresponding bias term, σ is the sigmoid activation function, $\odot$ represents the element-wise multiplication operation, $\mathbf{1}$ is a 1-vector with its all elements equal to 1. $\mathbf{S}^v$ is the final semantic interaction representation between the input text sequence and the global image, where $\mathbf{S}^v = \{S_i^v | S_i^v \in \mathbb{R}^d, i = 0, ..., M\}$.

3.3.2 Cross-modality Interaction between Text and Local Objects. The components of TextObj are the same with TextImg but the input representations.

For the basic-level semantic interaction (the left part of TextObj in Figure 2(B)), we have $\mathbf{h} = Q$ and $\mathbf{O} = K = V$. Then the word-aware object representation $\mathbf{S}^{o,1}$ for the input text sequence can be computed through *Equation*.9–*Equation*.12, where $\mathbf{S}^{o,1} \in \mathbb{R}^{(M+1)\times d}$.

For the superior-level semantic interaction(the right part of TextObj in Figure 2(B)), we initially assign $\mathbf{O}$ to Q, $\mathbf{h}$ to K and V to compute the object-aware word representation $\mathbf{S}^{o,2'}$ via *Equation*.9–*Equation*.12 at the first stage, where $\mathbf{S}^{o,2'} \in \mathbb{R}^{N\times d}$. At the second stage, we make $\mathbf{h}$ as Q, $\mathbf{S}^{o,2'}$ as K and V to distill the cross-modality representation $\mathbf{S}^{o,2}$ for the input text sequence, where $\mathbf{S}^{o,2} \in \mathbb{R}^{(M+1)\times d}$.

Subsequently, we pass $\mathbf{S}^{o,1}$ and $\mathbf{S}^{o,2}$ into the gate (*Equation*.13–*Equation*.14) to get semantic interaction representation $\mathbf{S}^o$ between the input text sequence and local objects, where $\mathbf{S}^o = \{S_i^o | S_i^o \in \mathbb{R}^d, i = 0, ..., M\}$

At the end of the MGCMT, we concatenate $\mathbf{S}^v$ and $\mathbf{S}^o$ to obtain the coarse-to-fine grained word-aware multimodal inference representation $\mathbf{S}$ based on the associated image.

$$\mathbf{S} = \{Linear([S_i^v, S_i^o]) | i = 0, ..., M\} = \{S_i | S_i \in \mathbb{R}^d, i = 0, ..., M\} \tag{15}$$

[3]We also call each object and image block as the token for convenience.

3.4 MNER Decoding Module

To make use of the textual representation and visual representation completely, we concatenate $\mathbf{h}$ and $\mathbf{S}$ to get the final hidden presentation $\mathbf{P} = \{P_i | P_i \in \mathbb{R}^{2d}, i = 0, ..., M\}$. Following [23], we then feed $\mathbf{P}$ to a standard CRF layer to produce the probability of a predicted label sequence y:

$$p(y|\mathbf{P}; \theta_m^{CRF}) = \frac{\prod_{i=0}^{M-1} \varphi_i(y_i, y_{i+1}; \mathbf{P})}{\sum_{y' \in \mathbb{Y}} \prod_{i=0}^{M-1} \varphi_i(y'_i, y'_{i+1}; \mathbf{P})} \tag{16}$$

where $\varphi_i(y_i, y_{i+1}; \mathbf{P})$ is a potential function, $\mathbb{Y}$ is a set of all possible label sequences, θ_m^{CRF} is a set of parameters that define the potential functions and the transition score from the label y_i to the label y_{i+1}.

We train the model via maximum conditional likelihood estimation for the training set $\{(\mathbf{X}, \mathbf{Y})_t\}$:

$$L_m(\theta_m^{CRF}) = \sum_t log\ p(\mathbf{Y}|\mathbf{P}; \theta_m^{CRF}) \tag{17}$$

In addition to the main modules mentioned above, the entity span detection(ESD) in [36] is also used as an auxiliary task in our work. We regard ESD as the simple sequence labeling for $\mathbf{X}$ with a label sequence $\mathbf{l} = \{l_0, ..., l_M\}$, where $l_i \in \{B, I, O\}$. Another independent unimodal Transformer taking as input $\mathbf{h}$ is employed to learn the textual hidden representation $\mathbf{A} = \{a_0, ..., a_M\}$ for this task. The prediction loss of $\{(\mathbf{X}, \mathbf{l})_t\}$ on another CRF decoder can be expressed by:

$$L_a(\theta_a^{CRF}) = \sum_t log\ p(\mathbf{l}|\mathbf{A}; \theta_a^{CRF}) \tag{18}$$

where θ_a^{CRF} has the same meaning with θ_m^{CRF} but the different CRF layer. The final loss during our training can be denoted as:

$$loss = L_m(\theta_m^{CRF}) + \lambda L_a(\theta_a^{CRF}) \tag{19}$$

where λ is a hyperparameter to control the contribution of the auxiliary ESD module.

In the decoding phase, we predict the output sequence $y*$ for given $\mathbf{X}$ based on maximizing the following score:

$$y* = \arg\max_{y \in \mathbb{Y}} p(y|\mathbf{P}; \theta_m^{CRF}) \tag{20}$$

4 EXPERIMENTS

4.1 Datasets and Settings

Datasets: We conduct the experiments on two publicly multimodal NER datasets based on Twitter, constructed by [37] and [20] separately. We follow the work [36] and denote them as TWITTER-2015 and TWITTER-2017 according to posts published time. TWITTER-2015 contains 8257 tweets posted by 2116 users and the total number of entities is 12800. TWITTER-2017 contains 4819 tweets and the number of entities is 8724. For fair comparison, we take the same split as in [34–37] (4000 for training, 1000 for development, and 3257 for test) for TWITTER-2015. For TWITTER-2017, we also split the dataset into three parts the same as [35, 36]: training set, development set, and test set which contains 3373, 723, and 723 tweets, respectively. Table 1 summaries sizes of the two datasets.

Hyperparameters: For both datasets, we have the same hyperparameters. In the experiments, the maximum length of the input text sequence is 128 which can cover all words, the batch size of training is 32 while it is 16 during test. The word representations $\mathbf{E}^B$ are encoded with the cased $BERT_{base}$ model pre-trained by [6] with the dimension of 768. The dimension of Word2Vec embedding in semantic augmentation is 200, and the number of similar words is 4. The head size in multi-head attention is 12, the feature dimensions in all the transformers are 768, and the number of transformer layers is 1. The learning rate, the dropout rate, the number of detected objects and epochs are respectively set to 3e-5, 0.1, 5 or 6, 75, which can achieve the best performance on the test set of both dataset through a small grid search over the combinations of [1e-5, 1e-4], [0.1,0.5],[4,7] and [30,100]. The trade-off parameter λ of CRF losses is set to 0.5.

In experiments, we pre-calculate semantic augmentation of each word and build the lookup table before running the model to improve the computation efficiency.

Table 1: The basic statistics of two Twitter datasets

Entity Type	TWITTER-2015			TWITTER-2017		
	Train	Dev	Test	Train	Dev	Test
Person	2217	552	1816	2943	626	621
Location	2091	522	1697	731	173	178
Organization	928	247	839	1674	375	395
Miscellaneous	940	225	726	701	150	157
Total	6176	1546	5078	6049	1324	1351
Num of Tweets	4000	1000	3257	3373	723	723

4.2 Baselines:

We compared our models with some typical approaches for NER, including unimodal approaches (only text as inputs) and multimodal approaches (text-image pairs as inputs). For unimodal approaches, we consider:

- CNN-BiLSTM-CRF [22] architecture extracts character-level and word-level representations automatically without heavy hand-crafted feature engineering. Of course, this model can also be applied for twitter data.
- HBiLSTM-CRF [14] is a hybrid tagging architecture similar to [22], except that utilizing an LSTM layer instead of the CNN layer to obtain character-level word representations.
- BERT [6], a language representation model, is designed to pre-train contextualized word representations. The pre-trained BERT model can be fine-tuned to create models for a wide range of tasks.
- BERT-CRF is a variant of BERT implemented by replacing the softmax layer with a CRF layer.

For multimodal approaches for MNER, we consider:

- GVATT-HBiLSTM-CRF [20], an end-to-end model with visual attention for entity tagging in multimodal social media data, is improved based on [14, 22].
- AdaCAN-CNN-BiLSTM-CRF [37], an adaptive co-attention network that combines textual and global visual information to recognize named entities, extended from BiLSTM-CRF.
- GAVTT-BERT-CRF and AdaCAN-BERT-CRF [36] are two multimodal approaches altered from GVATT-HBiLSTM-CRF and AdaCAN-CNN-BiLSTM-CRF by replacing the sentence encoder BiLSTM with BERT.
- OCSGA [34], a novel object-aware neural model that combines object-level visual and textual representations into predicting named entities in social media posts.

Table 2: Performance comparison of different competitive uni-modal and multi-modal approaches for NER.

Modality	Methods	TWITTER-2015							TWITTER-2017						
		Single Type(F1)				Overall			Single Type(F1)				Overall		
		PER	LOC	ORG	MISC	P	R	F1	PER	LOC	ORG	MISC	P	R	F1
Text	CNN-BiLSTM-CRF	80.86	75.39	47.77	32.61	66.24	68.09	67.15	87.99	77.44	74.02	60.82	80.00	78.76	79.37
	HBiLSTM-CRF	82.34	76.83	51.59	32.52	70.32	68.05	69.17	87.91	78.57	76.67	59.32	82.69	78.16	80.37
	BERT	84.72	79.91	58.26	38.81	68.30	74.61	71.32	90.88	84.00	79.25	61.63	82.19	83.72	82.95
	BERT-CRF	84.74	80.51	60.27	37.29	69.22	74.59	71.81	90.25	83.05	81.13	62.21	83.32	83.57	83.44
Text+Image	GVATT-HBiLSTM-CRF	82.66	77.21	55.06	35.25	73.96	67.90	70.80	89.34	78.53	79.12	62.21	83.41	80.38	81.87
	AdaCAN-CNN-BiLSTM-CRF	81.98	78.95	53.07	34.02	72.75	68.74	70.69	89.63	77.46	79.24	62.77	84.16	80.24	82.15
	GVATT-BERT-CRF	84.43	80.87	59.02	38.14	69.15	74.46	71.70	90.94	83.52	81.91	62.75	83.64	84.38	84.01
	AdaCAN-BERT-CRF	85.28	80.64	59.39	38.88	69.87	74.59	72.15	90.20	82.97	82.67	64.83	85.13	83.20	84.10
	OCSGA	84.68	79.95	56.64	39.47	74.71	71.21	72.92	-	-	-	-	-	-	-
	UMT	85.24	81.58	63.03	39.45	71.67	75.23	73.41	**91.56**	84.73	82.24	**70.10**	85.28	85.34	85.31
	ATTR-MMKG-MNER	84.28	79.43	58.97	41.47	**74.78**	71.82	73.27	-	-	-	-	-	-	-
	MAF	84.67	81.18	**63.35**	**41.82**	71.86	75.10	73.42	91.51	85.80	85.10	68.79	**86.13**	**86.38**	**86.25**
	MGCMT(ours)	**85.84**	**82.03**	63.08	40.81	73.57	**75.59**	**74.57**	90.82	**86.21**	**86.26**	66.88	86.03	86.16	86.09

- UMT [36] uses BERT to initiate the input text and it is the first multimodal method to adopt Transformer to encode text and whole image with a span detection task to alleviate the bias of incorporating visual features.
- ATTR-MMKG-MNER [4], a novel neural model with multiple attentions that integrates both image attributes and image knowledge into the neural MNER model.
- MAF [35] is the current state-of-the-art approach for MNER, and it is also based on UMT. The model uses a cross-modal alignment module to make the text representations and image representations more consistent and uses a cross-modal matching module to determine the proportion of retained image information.
- MGCMT, the model we proposed in this paper.

4.3 Main Results

Following [4, 34–36], we compute the experimental results of F1 score (**F1**) for every single type and overall precision (**P**), recall (**R**), and F1 score (**F1**) . For a fair comparison, we refer to the results of all baselines introduced in [4, 34–36] with the same datasets. All results are summarized in Table 2. Results show that our method outperforms the published state-of-the-art(SOTA) performance on TWITTER-15, and achieves the approximate SOTA on TWITTER-17 dataset. We also have several findings below:

(1) It is clear that BERT-based methods perform better on both datasets compared with BiLSTM-based encoders (CNN-BiLSTM-CRF vs BERT-CRF, GVATT-HBiLSTM-CRF vs GVATT-BERT-CRF, etc), which indicates that the pre-trained model is quite effective due to its large external knowledge support. The CRF demonstrates its boosting performance for NER through the single type and overall results of BERT-CRF and BERT, as it benefits from the link constraint between two consecutive labels (i.e., the label "I-PER" should not appear after "B-LOC").

(2) Through comparing all multimodal and unimodal approaches, we can find that visual information of either the global image or the local objects is valuable for MNER. For example, the overall F1 of multimodal GVATT-HBiLSTM-CRF is better than its unimodal peer HBiLSTM-CRF, and it improves 1.63% and 1.50% on TWITTER-2015 and TWITTER-2017 respectively.

(3) According to OCSGA and other multimodal methods, we find that fine-grained interaction between text and visual objects is necessary because it can provide guidance for extracting different types of entities by relevant objects. However, we also realize that the representation of global image must be complementary to local objects by comparing OCSGA and our approach. Both findings validate our second motivation.

(4) Introducing external knowledge to enhance the visual presentation is helpful for the effect of MNER just as ATTR-MMKG-MNER, which equally inspires us to enhance the representation of textual word. Compared to MAF, our MGCMT demonstrates its advance on TWITTER-2015 but performs slightly worse on TWITTER-2017 except for single type ORG and LOC, which may be due to the fact that there are many unmatched text-image pairs and it is one direction of our future work.

4.4 Detailed Analysis

The influence of different number of objects. As the number of objects(obj-num) in each image may have an influence on performance of MNER, we thus perform comparisons among different numbers to find the best. Considering the average number of detected objects in each image is 5.47 on TWITTER-2015 and 6.18 on TWITTER-2017 respectively, we set the candidate number in the set [4,5,6,7]. Results are shown in Table 3. We can see that for the same dataset, the different number of objects has a significant effect on performance especially for TWITTER-2017, and for different datasets the optimal number is also not the same. We obtain the best performance when the number is 5 on TWITTER-2015 but 6 on TWITTER-2017, which corresponds to the fact that the average number of objects is different in these two datasets.

The necessity of unimodal learning. In order to explore whether tokens in each mode are really interrelated with each other and can affect the performance of the whole model, we evaluate the unimodal learning for text, global image and local objects (i.e., uni-text, uni-img and uni-obj). As Table 4 shows, the unimodal learning actually has an important influence on MNER since the removal of it would lead to the drop of overall performance. This drop is noticeable especially in uni-obj of both datasets, which indicates the relative position of local objects in visual scenes is useful.

The importance of multi-level multimodal semantic interaction. We also verify the importance of multi-level multimodal semantic interaction within our approach by deleting the basic-level and superior-level separately. Results in Table 5 illustrate the indispensability of multi-level interaction to achieve the SOTA performance. Especially for the superior-level multimodal interaction, we think it can provide the visual guidance content required by the text more accurately and comprehensively.

Table 3: The test for different number of objects in our model.

Settings	TWITTER-2015			TWITTER-2017		
	P	R	F	P	R	F
obj-num=4	72.97	75.49	74.21	85.30	84.16	84.72
obj-num=5	73.57	**75.59**	**74.57**	85.97	84.38	85.17
obj-num=6	73.25	75.03	74.13	**86.03**	**86.16**	**86.09**
obj-num=7	**73.91**	75.03	74.47	85.60	85.79	85.69

Table 4: The test for different mode in the unimodal learning.

Settings	TWITTER-2015			TWITTER-2017		
	P	R	F	P	R	F
Default	73.57	**75.59**	**74.57**	**86.03**	86.16	**86.09**
w/o uni-text	73.50	74.42	73.96	85.87	85.94	85.90
w/o uni-obj	**73.72**	74.25	73.98	85.35	**86.23**	85.79
w/o uni-img	73.35	75.15	74.24	85.85	85.79	85.82

Table 5: The test for different semantic level in the cross-modality learning.

Settings	TWITTER-2015			TWITTER-2017		
	P	R	F	P	R	F
Default	**73.57**	**75.59**	**74.57**	**86.03**	**86.16**	**86.09**
w/o basic-level	73.14	75.03	74.07	85.45	86.08	85.77
w/o super-level	72.82	74.55	73.68	84.38	85.94	85.15

Table 6: The ablation study for different module in our model.

Settings	TWITTER-2015			TWITTER-2017		
	P	R	F	P	R	F
Default	**73.57**	75.59	**74.57**	86.03	**86.16**	**86.09**
w/o SemAug	72.03	75.71	73.82	**86.66**	84.16	85.39
w/o TextObj	72.21	**75.80**	73.96	85.94	85.05	85.49
w/o TextImg	72.40	75.23	73.79	85.47	85.34	85.41
w/o ESD	73.11	74.76	73.93	85.16	84.97	85.07

Ablation study. To investigate the contributions of each main module in our model, we conducted an ablation study. Table 6 shows comparison results between the full model and its ablation methods. We find that: 1) All the modules have contributions to our final optimal model. 2) When we remove the word semantic augmentation module(SemAug), the performance drops a lot. This observation reveals that the combination of contextualized word representations and word semantic augmentation representations is helpful for NER on tweets, and it verifies the capacity of semantic augmentation to deal with short and informal contents. 3) Any removal of the TextImg or TextObj module results in the inferior performance, indicating that both the fine-grained semantic interaction between text and local objects and the coarse-grained semantic interaction between text and global image play important roles in NER for tweets. In fact, removing TextImg module has a slightly greater impact than removing TextObj module. The reason may be that not all images have objects related to entities in text. 4) As the table shows, the elimination of the ESD leads to performance losses on both datasets. The results explain that ESD can really guide token tagging effectively. In fact, the ESD can be viewed as entity detection based on the pure text but not includes entity classification to alleviate the bias of vision.

4.5 Case Study

To better appreciate the advance of our model, we select four representative cases from the test set of TWITTER-2015, and compare their prediction results of OCSGA, UMT and our model. Table 7 shows the prediction results. Next, we will analyze each case in detail.

As we can see, the image of case-a can not actually provide effective visual guidance information(whether the global image or the detected objects) to the text for NER. So, the pure text is the only resource leveraged to detect and classify the entities. Unfortunately, predicted results show that OCSGA and UMT have no capacity to do with such short and informal text as OCSGA can not detect any entities and UMT detects the entities but classifies them into the wrong types despite the help of BERT. However, our approach has achieved the complete and correct results of NER with the help of semantic augmentation. Specifically, the similar words of "GIS", "#ESRI" and "#NYC" are {"Bioinformatics", "Mysql", "#Hadoop", "#Hana"}, {"OpenStreetMap", "Enerkem", "Akamai", "#Gartner"} and {"SF", "Chicago", "Philly", "Seattle"} respectively, making us believe the effectiveness of semantic augmentation.

Case-b reveals the success of the fine-grained semantic interaction between text and local objects. We can find that OCSGA and our approach can accurately predict "Kawhi Leonard" with the guidance of detected objects "person" in the image while UMT obtains the wrong prediction because of the noisy guidance of the global image. In fact, the global image is more like a sports hall.

In contrast to case-b, case-c shows the importance of using the global image. Limited representations of detected objects mislead the prediction of OCSGA for "Nirvana" resulting in the wrong empirical classification. UMT and our approach can correctly predict the entity type *ORG* according to the powerful reasoning of global scene. Case-b and case-c indicate the necessity of fusing multimodal representations from the fine-grained and the coarse-grained.

Although the prediction results of all methods are inconsistent with the original annotation in case-d, we do not approve the entity span "David Attenborough" of the original annotation but detected "Sir David Attenborough" based on common-sense knowledge and consensus. Besides, the annotation "[IPC, *ORG*] President [Sir Philip Craven, *PER*] named @SportsBusiness Innovator of the Year" existed in the training set is also inconsistent with case-d and supports our view. In fact, there are many such instances in the test set. We think that they have affected our NER performance.

5 CONCLUSION

In this work, we propose the multi-granularity cross-modality representation learning for MNER in tweets. On one hand, the model enhances the representation of each word in input text by semantic augmentation to resolve the data sparsity. On the other hand, it can achieve the cross-modality semantic interaction between text and image at the different vision granularity to get the most effective

Table 7: The case comparisons of our model and other excellent approaches.

	a	b	c	d
Multimodal Tweets	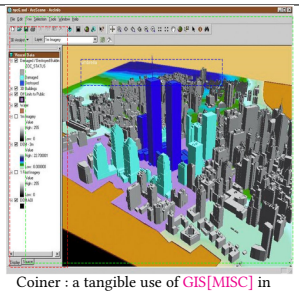 Coiner : a tangible use of GIS[MISC] in crisis mapping #TAMUCC #COMM4335 #ESRI[ORG] #NYC [LOC] .	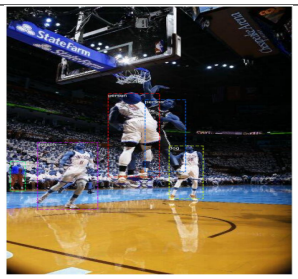 The Kawhi Leonard [PER] poster has officially hit the shelves .	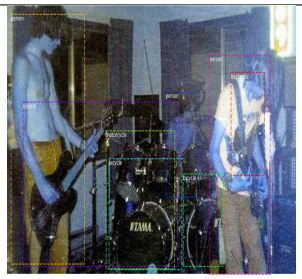 Nirvana[ORG] first gig photos unearthed after teenager tweets Kurt Cobain[PER] pictures.	Images of natural history legend Sir David Attenborough [PER] .
OCSGA	None ×	Kawhi Leonard [PER] √	Nirvana[PER] × Kurt Cobain[PER] √	Sir David Attenborough [PER] ◇
UMT	GIS[ORG] × #ESRI[MISC] × #NYC[LOC] √	Kawhi Leonard [MISC] ×	Nirvana[ORG] √ Kurt Cobain[PER] √	Sir David Attenborough [PER] ◇
MGCMT	GIS[MISC] √ #ESRI[ORG] √ #NYC[LOC] √	Kawhi Leonard [PER] √	Nirvana[ORG] √ Kurt Cobain[PER] √	Sir David Attenborough [PER] ◇

local-to-global multimodal guidance representation for MNER. We have conducted experiments on the two public twitter datasets, and the results demonstrate the advance of our proposed method. Through empirical analysis, we find that it is reasonable for our model to pay more attention on cross-modality interaction between text and image at different vision granularity.

REFERENCES

[1] Gustavo Aguilar, Suraj Maharjan, Adrian Pastor López-Monroy, and Thamar Solorio. 2017. A Multi-task Approach for Named Entity Recognition in Social Media Data. In *Proceedings of the 3rd Workshop on Noisy User-generated Text*. Association for Computational Linguistics, Copenhagen, Denmark, 148–153. https://doi.org/10.18653/v1/W17-4419

[2] Maaz Amjad, Grigori Sidorov, and Alisa Zhila. 2020. Data Augmentation using Machine Translation for Fake News Detection in the Urdu Language. In *Proceedings of the 12th Language Resources and Evaluation Conference*. European Language Resources Association, Marseille, France, 2537–2542. https://aclanthology.org/2020.lrec-1.309

[3] Omer Arshad, Ignazio Gallo, Shah Nawaz, and Alessandro Calefati. 2019. Aiding Intra-Text Representations with Visual Context for Multimodal Named Entity Recognition.

[4] Dawei Chen, Zhixu Li, Binbin Gu, and Zhigang Chen. 2021. Multimodal Named Entity Recognition with Image Attributes and Image Knowledge. In *Database Systems for Advanced Applications*, Christian S. Jensen, Ee-Peng Lim, De-Nian Yang, Wang-Chien Lee, Vincent S. Tseng, Vana Kalogeraki, Jen-Wei Huang, and Chih-Ya Shen (Eds.). Springer International Publishing, Cham, 186–201.

[5] Jason P. C. Chiu and Eric Nichols. 2016. Named Entity Recognition with Bidirectional LSTM-CNNs. arXiv:1511.08308 [cs.CL]

[6] Jacob Devlin, Ming-Wei Chang, Kenton Lee, and Kristina Toutanova. 2019. BERT: Pre-training of Deep Bidirectional Transformers for Language Understanding. arXiv:1810.04805 [cs.CL]

[7] Kaiming He, Georgia Gkioxari, Piotr Dollár, and Ross Girshick. 2017. Mask R-CNN. In *2017 IEEE International Conference on Computer Vision (ICCV)*. 2980–2988. https://doi.org/10.1109/ICCV.2017.322

[8] Kaiming He, Xiangyu Zhang, Shaoqing Ren, and Jian Sun. 2016. Deep Residual Learning for Image Recognition. In *2016 IEEE Conference on Computer Vision and Pattern Recognition (CVPR)*. 770–778. https://doi.org/10.1109/CVPR.2016.90

[9] Zhiheng Huang, Wei Xu, and Kai Yu. 2015. Bidirectional LSTM-CRF models for sequence tagging. *arXiv preprint arXiv:1508.01991* (2015).

[10] Zongcheng Ji, Aixin Sun, Gao Cong, and Jialong Han. 2016. Joint recognition and linking of fine-grained locations from tweets. In *Proceedings of the 25th international conference on world wide web*. 1271–1281.

[11] Zhanming Jie and Wei Lu. 2019. Dependency-Guided LSTM-CRF for Named Entity Recognition. In *Proceedings of the 2019 Conference on Empirical Methods in Natural Language Processing and the 9th International Joint Conference on Natural Language Processing (EMNLP-IJCNLP)*. Association for Computational Linguistics, Hong Kong, China, 3862–3872. https://aclanthology.org/D19-1399

[12] Varun Kumar, Hadrien Glaude, Cyprien de Lichy, and Wlliam Campbell. 2019. A Closer Look At Feature Space Data Augmentation For Few-Shot Intent Classification. In *Proceedings of the 2nd Workshop on Deep Learning Approaches for Low-Resource NLP (DeepLo 2019)*. Association for Computational Linguistics, Hong Kong, China, 1–10. https://doi.org/10.18653/v1/D19-6101

[13] Onur Kuru, Ozan Arkan Can, and Deniz Yuret. 2016. Charner: Character-level named entity recognition. In *Proceedings of COLING 2016, the 26th International Conference on Computational Linguistics: Technical Papers*. 911–921.

[14] Guillaume Lample, Miguel Ballesteros, Sandeep Subramanian, Kazuya Kawakami, and Chris Dyer. 2016. Neural Architectures for Named Entity Recognition. arXiv:1603.01360 [cs.CL]

[15] Y. LeCun, B. Boser, J. S. Denker, D. Henderson, R. E. Howard, W. Hubbard, and L. D. Jackel. 1989. Backpropagation Applied to Handwritten Zip Code Recognition. *Neural Computation* 1, 4 (1989), 541–551. https://doi.org/10.1162/neco.1989.1.4.541

[16] Jingye Li, Hao Fei, Jiang Liu, Shengqiong Wu, Meishan Zhang, Chong Teng, Donghong Ji, and Fei Li. 2022. Unified Named Entity Recognition as Word-Word Relation Classification. In *Proceedings of the AAAI Conference on Artificial Intelligence*.

[17] Wenhui Liao and Sriharsha Veeramachaneni. 2009. A simple semi-supervised algorithm for named entity recognition. In *Proceedings of the NAACL HLT 2009 Workshop on Semi-Supervised Learning for Natural Language Processing*. 58–65.

[18] Nut Limsopatham and Nigel Collier. 2016. Bidirectional LSTM for Named Entity Recognition in Twitter Messages. In *Proceedings of the 2nd Workshop on Noisy User-generated Text (WNUT)*. The COLING 2016 Organizing Committee, Osaka, Japan, 145–152. https://aclanthology.org/W16-3920

[19] Tsung-Yi Lin, Michael Maire, Serge Belongie, James Hays, Pietro Perona, Deva Ramanan, Piotr Dollár, and C. Lawrence Zitnick. 2014. Microsoft COCO: Common Objects in Context. In *Computer Vision – ECCV 2014*, David Fleet, Tomas Pajdla, Bernt Schiele, and Tinne Tuytelaars (Eds.). Springer International Publishing, Cham, 740–755.

[20] Di Lu, Leonardo Neves, Vitor Carvalho, Ning Zhang, and Heng Ji. 2018. Visual attention model for name tagging in multimodal social media. In *Proceedings of the 56th Annual Meeting of the Association for Computational Linguistics (Volume 1: Long Papers)*. 1990–1999.

[21] Ying Luo, Fengshun Xiao, and Hai Zhao. 2020. Hierarchical Contextualized Representation for Named Entity Recognition. *Proceedings of the AAAI Conference on Artificial Intelligence* 34 (04 2020), 8441–8448. https://doi.org/10.1609/aaai.v34i05.6363

[22] Xuezhe Ma and Eduard Hovy. 2016. End-to-end Sequence Labeling via Bi-directional LSTM-CNNs-CRF. In *Proceedings of the 54th Annual Meeting of the Association for Computational Linguistics (Volume 1: Long Papers)*. Association for Computational Linguistics, Berlin, Germany, 1064–1074. https://doi.org/10.18653/v1/P16-1101

[23] Seungwhan Moon, Leonardo Neves, and Vitor Carvalho. 2018. Multimodal named entity recognition for short social media posts. *arXiv preprint arXiv:1802.07862* (2018).

[24] Yuyang Nie, Yuanhe Tian, Xiang Wan, Yan Song, and Bo Dai. 2020. Named Entity Recognition for Social Media Texts with Semantic Augmentation. In *Proceedings of the 2020 Conference on Empirical Methods in Natural Language Processing (EMNLP)*. Association for Computational Linguistics, Online, 1383–1391. https://doi.org/10.18653/v1/2020.emnlp-main.107

[25] Alexandre Passos, Vineet Kumar, and Andrew Mccallum. 2014. Lexicon Infused Phrase Embeddings for Named Entity Resolution. *Lexicon Infused Phrase Embeddings for Named Entity Resolution* (04 2014). https://doi.org/10.3115/v1/W14-1609

[26] Burr Settles. 2004. Biomedical named entity recognition using conditional random fields and rich feature sets. In *Proceedings of the international joint workshop on natural language processing in biomedicine and its applications (NLPBA/BioNLP)*. 107–110.

[27] Emma Strubell, Patrick Verga, David Belanger, and Andrew McCallum. 2017. Fast and Accurate Entity Recognition with Iterated Dilated Convolutions. In *Proceedings of the 2017 Conference on Empirical Methods in Natural Language Processing*. Association for Computational Linguistics, Copenhagen, Denmark,

2670–2680. https://doi.org/10.18653/v1/D17-1283

[28] Lin Sun, Jiquan Wang, Yindu Su, Fangsheng Weng, Yuxuan Sun, Zengwei Zheng, and Yuanyi Chen. 2020. RIVA: A Pre-trained Tweet Multimodal Model Based on Text-image Relation for Multimodal NER. In *Proceedings of the 28th International Conference on Computational Linguistics*. International Committee on Computational Linguistics, Barcelona, Spain (Online), 1852–1862. https://doi.org/10.18653/v1/2020.coling-main.168

[29] Lin Sun, Jiquan Wang, Kai Zhang, Yindu Su, and Fangsheng Weng. 2021. RpBERT: A Text-image Relation Propagation-based BERT Model for Multimodal NER. In *Proceedings of the AAAI Conference on Artificial Intelligence*, Vol. 35. 13860–13868.

[30] Erik F. Tjong Kim Sang and Jorn Veenstra. 1999. Representing Text Chunks. In *Ninth Conference of the European Chapter of the Association for Computational Linguistics*. Association for Computational Linguistics, Bergen, Norway, 173–179. https://aclanthology.org/E99-1023

[31] Kentaro Torisawa et al. 2007. Exploiting Wikipedia as external knowledge for named entity recognition. In *Proceedings of the 2007 joint conference on empirical methods in natural language processing and computational natural language learning (EMNLP-CoNLL)*. 698–707.

[32] Quan Tran, Andrew MacKinlay, and Antonio Jimeno Yepes. 2017. Named entity recognition with stack residual lstm and trainable bias decoding. *arXiv preprint arXiv:1706.07598* (2017).

[33] Ashish Vaswani, Noam Shazeer, Niki Parmar, Jakob Uszkoreit, Llion Jones, Aidan N Gomez, Łukasz Kaiser, and Illia Polosukhin. 2017. Attention is all you need. *Advances in neural information processing systems* 30 (2017).

[34] Zhiwei Wu, Changmeng Zheng, Yi Cai, Junying Chen, Ho-fung Leung, and Qing Li. 2020. *Multimodal Representation with Embedded Visual Guiding Objects for Named Entity Recognition in Social Media Posts*. Association for Computing Machinery, New York, NY, USA, 1038–1046. https://doi.org/10.1145/3394171.3413650

[35] Bo Xu, Shizhou Huang, Chaofeng Sha, and Hongya Wang. 2022. MAF: A General Matching and Alignment Framework for Multimodal Named Entity Recognition. In *WSDM '22: The Fifteenth ACM International Conference on Web Search and Data Mining, Virtual Event / Tempe, AZ, USA, February 21 - 25, 2022*. ACM, 1215–1223. https://doi.org/10.1145/3488560.3498475

[36] Jianfei Yu, Jing Jiang, Li Yang, and Rui Xia. 2020. Improving multimodal named entity recognition via entity span detection with unified multimodal transformer. Association for Computational Linguistics.

[37] Qi Zhang, Jinlan Fu, Xiaoyu Liu, and Xuanjing Huang. 2018. Adaptive co-attention network for named entity recognition in tweets. In *Thirty-Second AAAI Conference on Artificial Intelligence*.

[38] GUODONG ZHOU and JIAN SU. 2005. Machine learning-based named entity recognition via effective integration of various evidences. *Natural Language Engineering* 11, 2 (2005), 189–206. https://doi.org/10.1017/S1351324904003559

[39] Jingwei Zhuo, Yong Cao, Jun Zhu, Bo Zhang, and Zaiqing Nie. 2016. Segment-Level Sequence Modeling using Gated Recursive Semi-Markov Conditional Random Fields. 1413–1423. https://doi.org/10.18653/v1/P16-1134